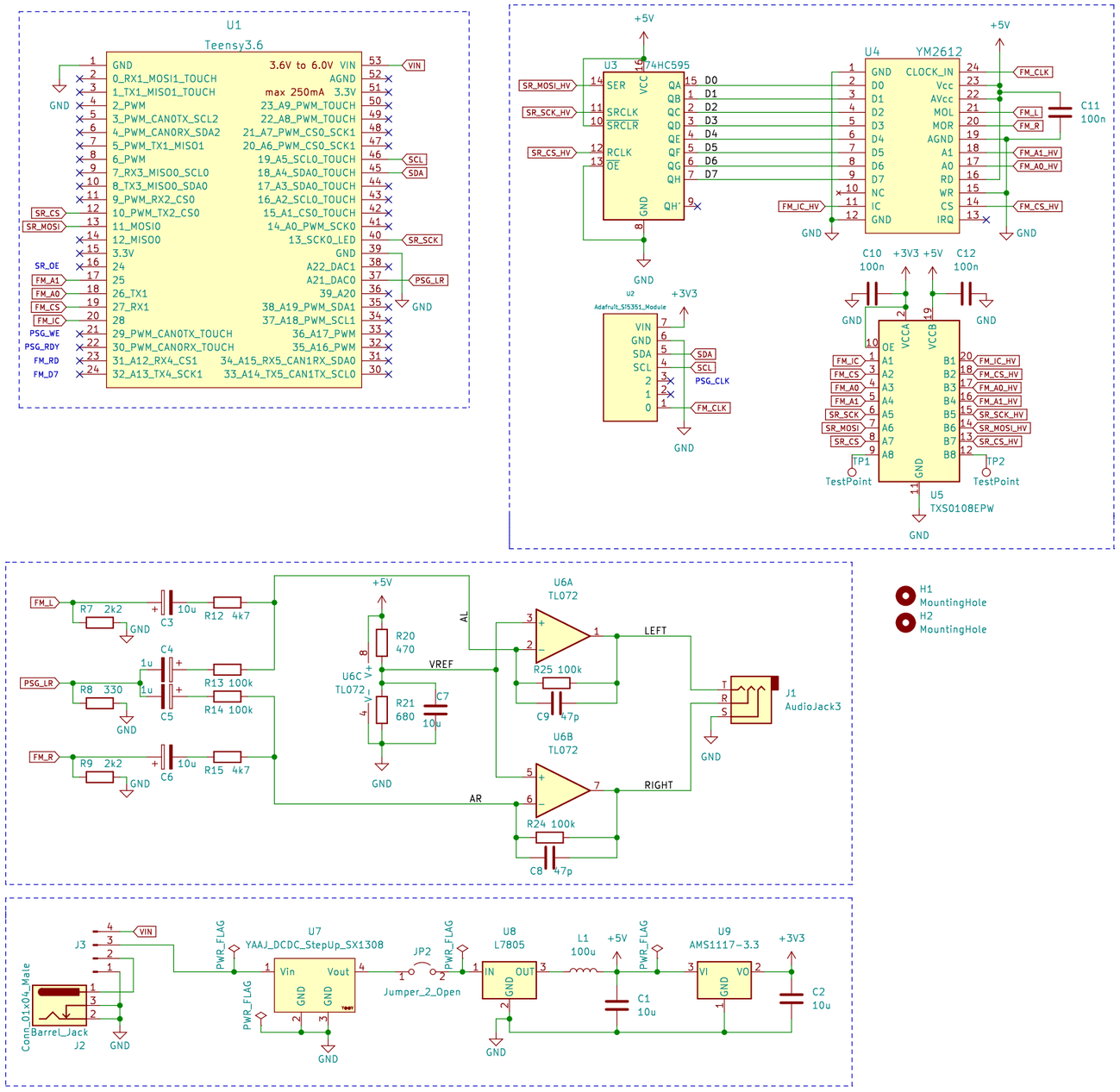
U1
Teensy3.6
GND
0_RX1_MOSI1_TOUCH
1_TX1_MISO1_TOUCH
2_PWM
3_PWM_CAN0TX_SCL2
4_PWM_CAN0RX_SDA2
5_PWM_TX1_MISO1
6_PWM
7_RX3_MISO0_SCL0
8_TX3_MISO0_SDA0
9_PWM_RX2_CS0
10_PWM_TX2_CS0
11_MOSI0
12_MISO0
3.3V
24
25
26_TX1
27_RX1
28
29_PWM_CAN0TX_TOUCH
30_PWM_CAN0RX_TOUCH
31_A12_RX4_CS1
32_A13_TX4_SCK1
3.6V to 6.0V VIN
AGND
max 250mA 3.3V
23_A9_PWM_TOUCH
22_A8_PWM_TOUCH
21_A7_PWM_CS0_SCK1
20_A6_PWM_CS0_SCK1
19_A5_SCL0_TOUCH
18_A4_SDA0_TOUCH
17_A3_SDA0_TOUCH
16_A2_SCL0_TOUCH
15_A1_CS0_TOUCH
14_A0_PWM_SCK0
13_SCK0_LED
GND
A22_DAC1
A21_DAC0
39_A20
38_A19_PWM_SDA1
37_A18_PWM_SCL1
36_A17_PWM
35_A16_PWM
34_A15_RX5_CAN1RX_SDA0
33_A14_TX5_CAN1TX_SCL0
VIN
SCL
SDA
SR_CS
SR_MOSI
SR_OE
FM_A1
FM_A0
FM_CS
FM_IC
PSG_WE
PSG_RDY
FM_RD
FM_D7
SR_SCK
PSG_LR
+5V
U3
74HC595
SER
SRCLK
SRCLR
RCLK
OE
VCC
GND
QA
QB
QC
QD
QE
QF
QG
QH
QH'
D0
D1
D2
D3
D4
D5
D6
D7
SR_MOSI_HV
SR_SCK_HV
SR_CS_HV
U4
YM2612
CLOCK_IN
Vcc
AVcc
MOL
MOR
AGND
A1
A0
RD
WR
CS
IRQ
NC
IC
FM_CLK
FM_L
FM_R
FM_A1_HV
FM_A0_HV
FM_CS_HV
FM_IC_HV
C11
100n
U2
Adafruit_SI5351_Module
+3V3
VIN
SDA
SCL
PSG_CLK
FM_CLK
C10
100n
C12
100n
VCCA
VCCB
OE
A1
A2
A3
A4
A5
A6
A7
A8
B1
B2
B3
B4
B5
B6
B7
B8
TP1
TestPoint
TP2
TestPoint
U5
TXS0108EPW

FM_L
R7 2k2
GND
C3
10u
R12 4k7
PSG_LR
R8 330
C4
1u
C5
1u
R13 100k
R14 100k
FM_R
R9 2k2
C6
10u
R15 4k7
+5V
R20
470
U6C
TL072
R21
680
C7
10u
VREF
AL
AR
U6A
TL072
R25 100k
C9 47p
U6B
TL072
R24 100k
C8 47p
LEFT
RIGHT
J1
AudioJack3

H1
MountingHole
H2
MountingHole

J3
VIN
Conn_01x04_Male
Barrel_Jack
J2
GND
PWR_FLAG
U7
YAAJ_DCDC_StepUp_SX1308
Vin
Vout
GND
JP2
Jumper_2_Open
U8
L7805
IN
OUT
L1
100u
+5V
C1
10u
U9
AMS1117-3.3
VI
VO
+3V3
C2
10u