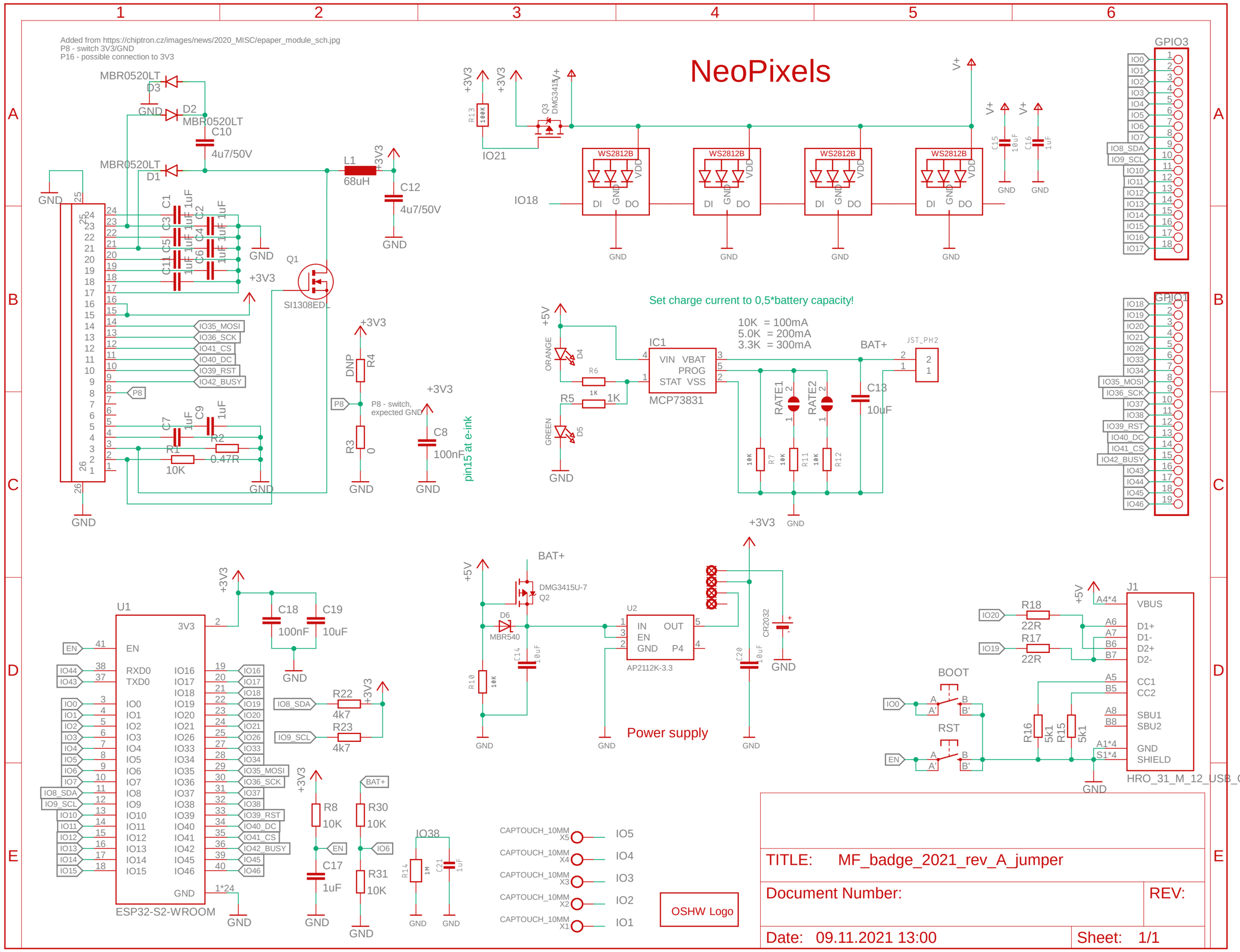
Added from https://chiptron.cz/images/news/2020_MISC/epaper_module_sch.jpg
P8 - switch 3V3/GND
P16 - possible connection to 3V3
NeoPixels
WS2812B
Set charge current to 0,5*battery capacity!
10K = 100mA
5.0K = 200mA
3.3K = 300mA
MCP73831
IC1
JST_PH2
BAT+
P8 - switch, expected GND
pin15 at e-ink
ESP32-S2-WROOM
U1
AP2112K-3.3
U2
DMG3415U-7
MBR540
CR2032
Power supply
HRO_31_M_12_USB_C
J1
BOOT
RST
CAPTOUCH_10MM
OSHW Logo
TITLE: MF_badge_2021_rev_A_jumper
Document Number:
REV:
Date: 09.11.2021 13:00
Sheet: 1/1