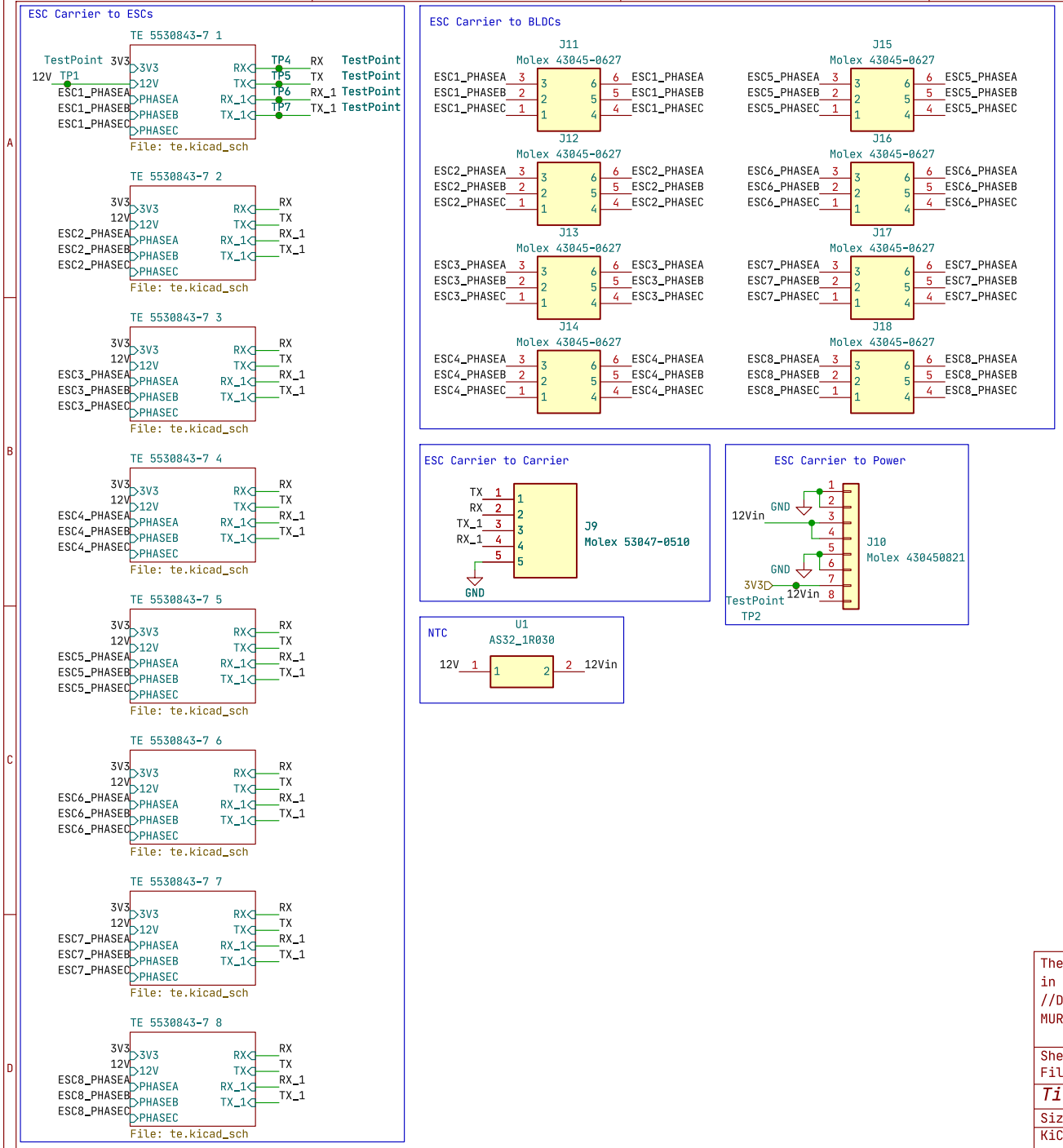

The MUREX ESC Carrier board is designed for rapid replacement of components in the event of a speed controller failure.
//DREAM BIG. DREAM MUREX.
MUREX Robotics [Celine Zhang]

Sheet: /
File: ESC_Carrier.kicad_sch

Title: MUREX ESC Carrier Board

Size: A4	Date: 2023-07-20	Rev: V1.0
KiCad E.D.A. kicad 7.99.0-957-g18dd623122		Id: 1/9

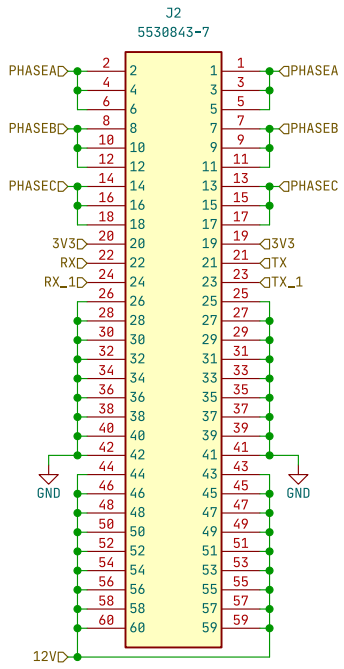

Sheet: /TE 5530843-7 2/
File: te.kicad_sch

Title:

Size: A4	Date:	Rev:
KiCad E.D.A. kicad 7.99.0-957-g18dd623122		Id: 3/9

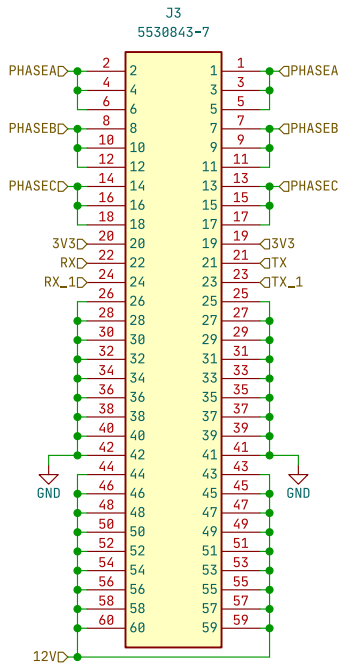

Sheet: /TE 5530843-7 3/
File: te.kicad_sch

Title:

Size: A4	Date:	Rev:
KiCad E.D.A. kicad 7.99.0-957-g18dd623122		Id: 5/9

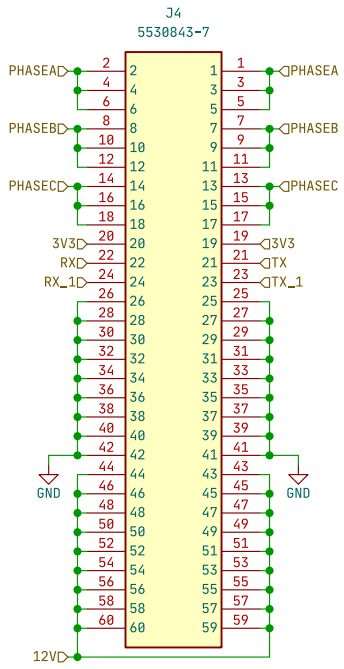

Sheet: /TE 5530843-7 4/
File: te.kicad_sch

Title:

Size: A4	Date:	Rev:
KiCad E.D.A. kicad 7.99.0-957-g18dd623122		Id: 7/9

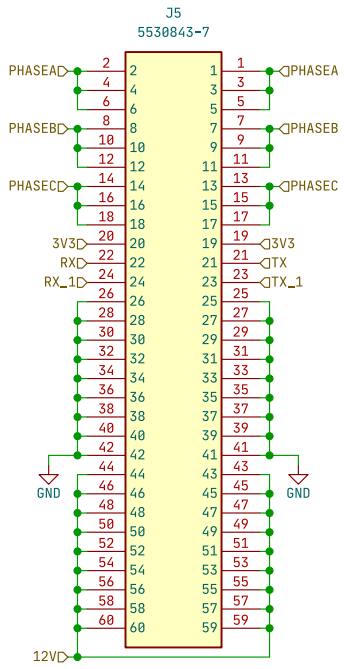

Sheet: /TE 5530843-7 5/
File: te.kicad_sch

Title:

Size: A4	Date:	Rev:
KiCad E.D.A. kicad 7.99.0-957-g18dd623122		Id: 9/9

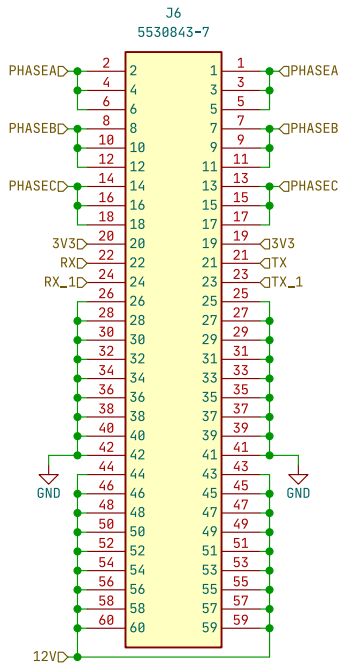

Sheet: /TE 5530843-7 6/
File: te.kicad_sch

Title:

Size: A4	Date:	Rev:
KiCad E.D.A. kicad 7.99.0-957-g18dd623122		Id: 11/9

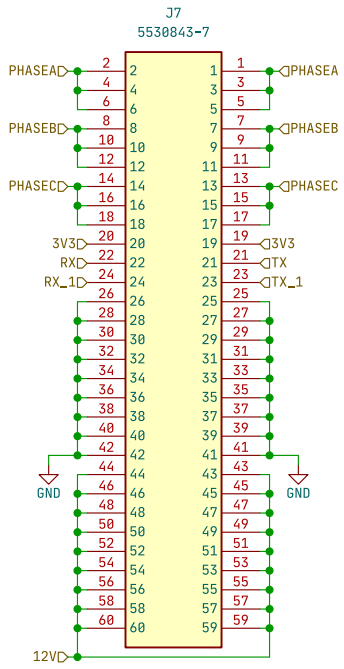

Sheet: /TE 5530843-7 7/
File: te.kicad_sch

Title:

Size: A4	Date:	Rev:
KiCad E.D.A. kicad 7.99.0-957-g18dd623122		Id: 13/9

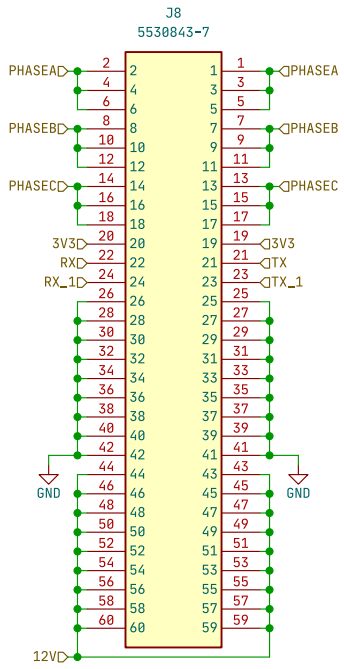

Sheet: /TE 5530843-7 8/
File: te.kicad_sch

Title:

Size: A4	Date:	Rev:
KiCad E.D.A. kicad 7.99.0-957-g18dd623122		Id: 15/9

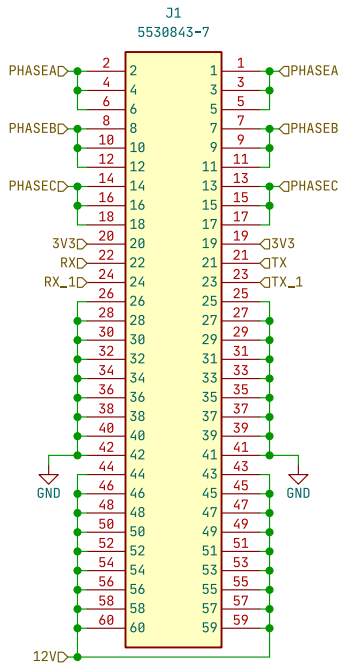

Sheet: /TE 5530843-7 1/
File: te.kicad_sch

Title:

Size: A4	Date:	Rev:
KiCad E.D.A. kicad 7.99.0-957-g18dd623122		Id: 18/9