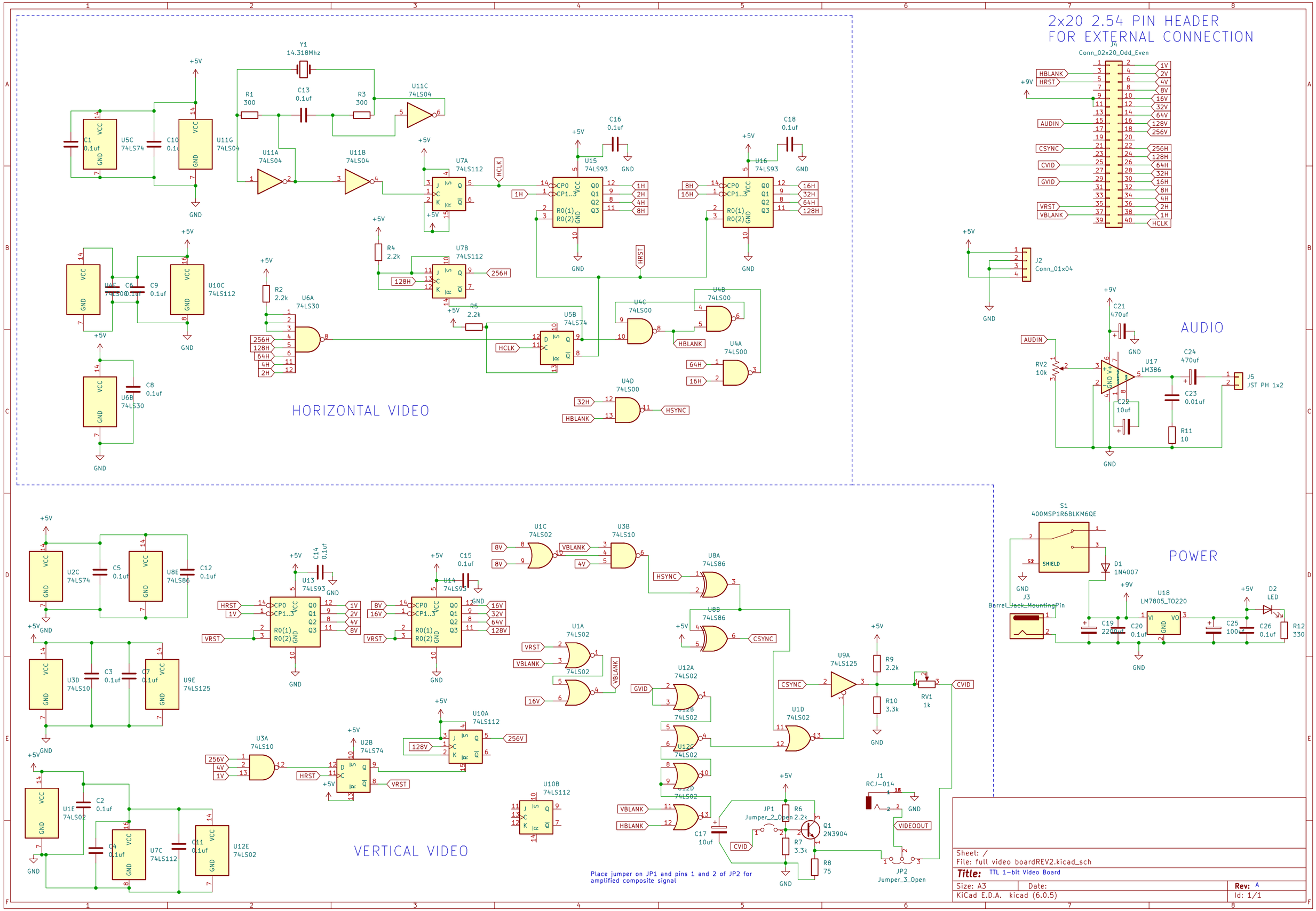

Sheet: /
File: full video boardREV2.kicad_sch

Title: TTL 1-bit Video Board

Size: A3	Date:	Rev: A
KiCad E.D.A. kicad (6.0.5)		Id: 1/1