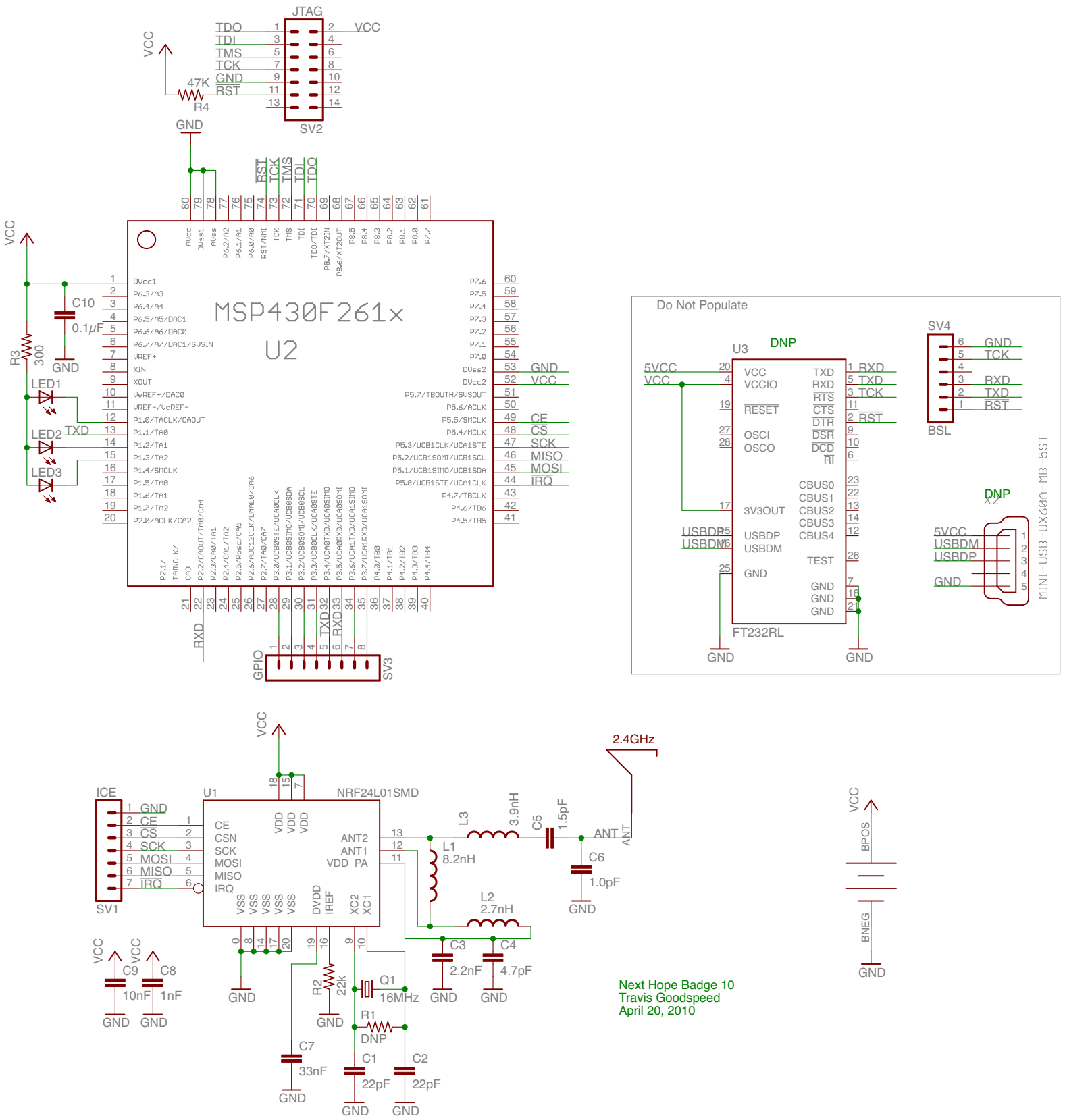
JTAG
TDO
TDI
TMS
TCK
GND
RST
VCC
47K
R4
SV2
MSP430F261x
U2
C10
0.1µF
R3
300
LED1
LED2
LED3
TXD
RXD
GPIO
SV3
CE
CS
SCK
MISO
MOSI
IRQ
Do Not Populate
U3
DNP
5VCC
FT232RL
SV4
BSL
X2
MINI-USB-UX60A-MB-5ST
ICE
SV1
NRF24L01SMD
L1
8.2nH
L2
2.7nH
L3
3.9nH
C5
1.5pF
C6
1.0pF
C3
2.2nF
C4
4.7pF
C9
10nF
C8
1nF
R2
22k
Q1
16MHz
R1
DNP
C7
33nF
C1
22pF
C2
22pF
2.4GHz
ANT
BPOS
BNEG
Next Hope Badge 10
Travis Goodspeed
April 20, 2010