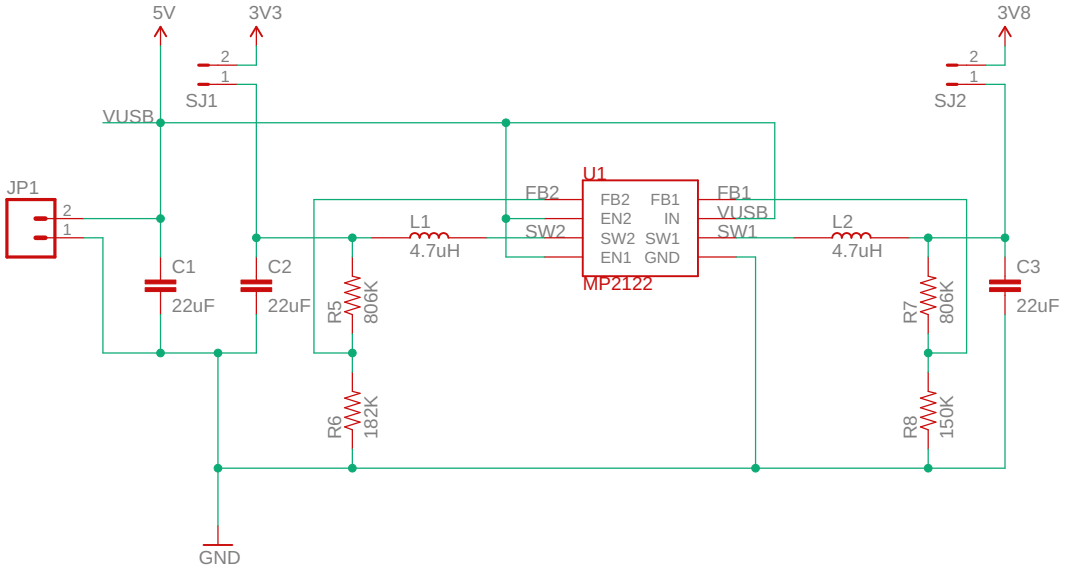
5V
3V3
3V8
SJ1
SJ2
VUSB
JP1
U1
FB2
FB1
EN2
IN
SW2
SW1
EN1
GND
MP2122
L1
4.7uH
L2
4.7uH
C1
22uF
C2
22uF
C3
22uF
R5
806K
R6
182K
R7
806K
R8
150K
GND

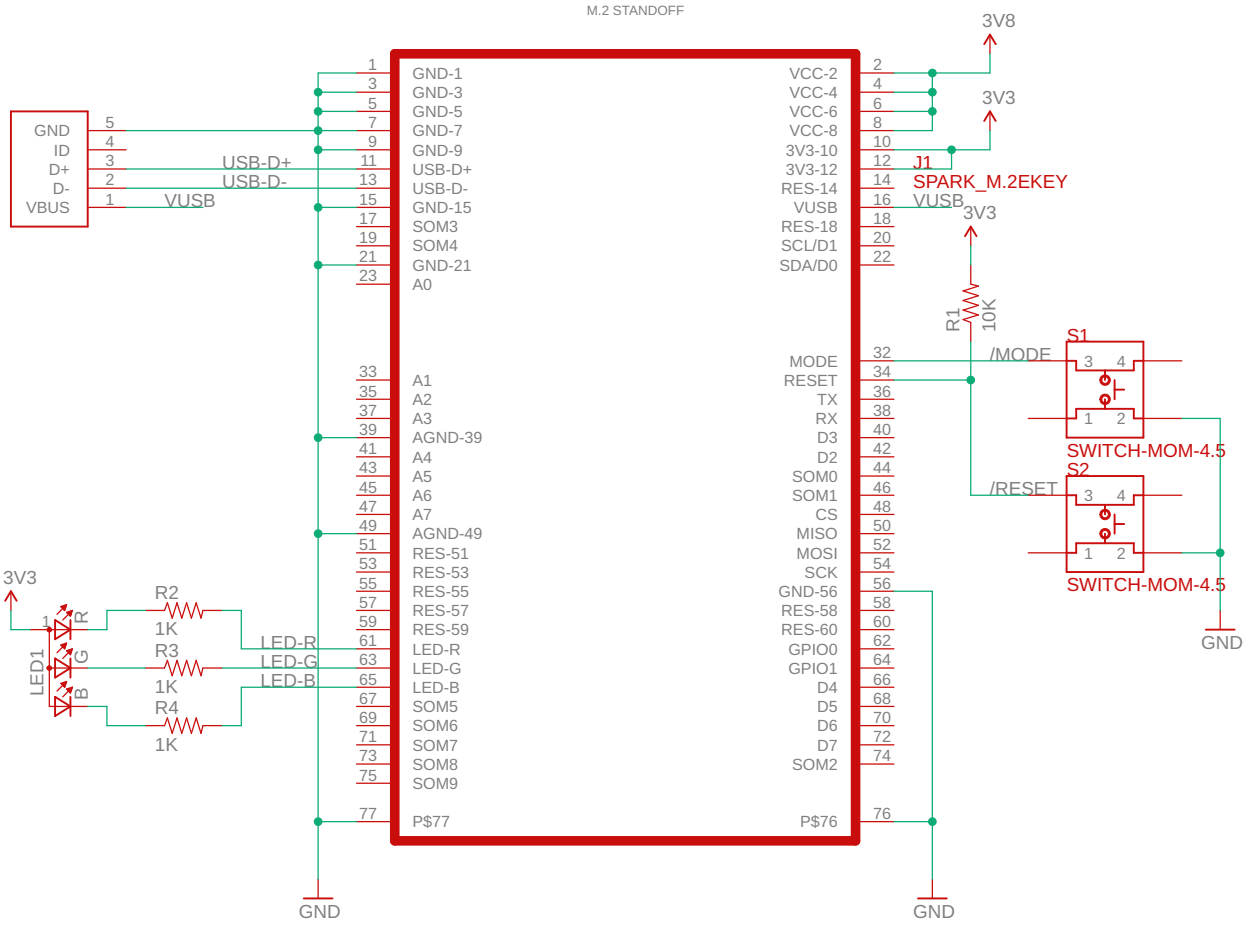
M.2 STANDOFF
GND
ID
D+
D-
VBUS
USB-D+
USB-D-
VUSB
GND-1
GND-3
GND-5
GND-7
GND-9
USB-D+
USB-D-
GND-15
SOM3
SOM4
GND-21
A0
A1
A2
A3
AGND-39
A4
A5
A6
A7
AGND-49
RES-51
RES-53
RES-55
RES-57
RES-59
LED-R
LED-G
LED-B
SOM5
SOM6
SOM7
SOM8
SOM9
P$77
VCC-2
VCC-4
VCC-6
VCC-8
3V3-10
3V3-12
RES-14
VUSB
RES-18
SCL/D1
SDA/D0
MODE
RESET
TX
RX
D3
D2
SOM0
SOM1
CS
MISO
MOSI
SCK
GND-56
RES-58
RES-60
GPIO0
GPIO1
D4
D5
D6
D7
SOM2
P$76
3V8
3V3
J1
SPARK_M.2EKEY
VUSB
R1
10K
/MODE
/RESET
S1
S2
SWITCH-MOM-4.5
SWITCH-MOM-4.5
LED1
R
G
B
R2
1K
R3
1K
R4
1K
LED-R
LED-G
LED-B
GND
GND
GND