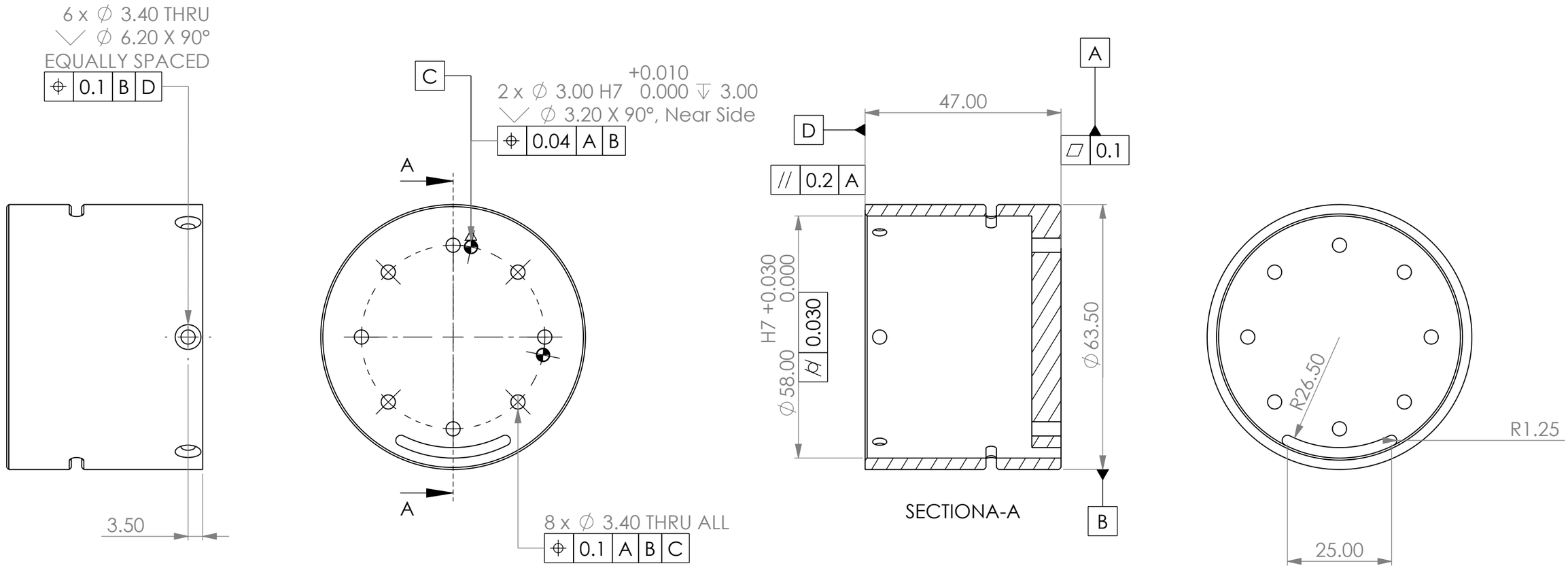

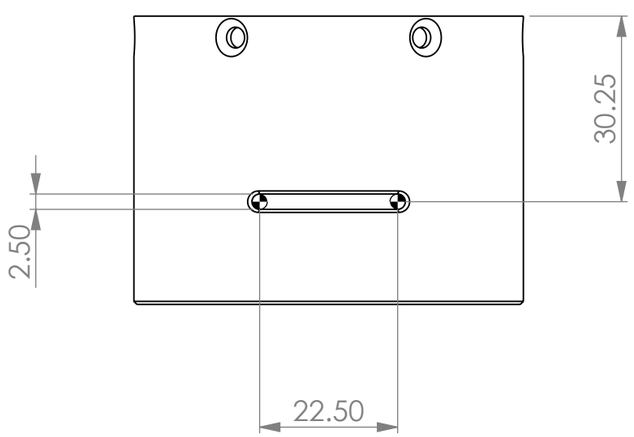

NOTES

- DIMENSIONS ARE DEFINED FOR AFTER SURFACE FINISH OPERATIONS.
- THE MECHANICAL INTERFERENCE DIMENSIONS SHALL BE TOLERANCED IN ACCORDANCE WITH ISO 286.
- GEOMETRIC TOLERANCES SHALL BE INTERPRETED IN ACCORDANCE WITH ISO 1101.
- THE THREADS SHALL BE IN ACCORDANCE WITH ISO 261.

UNLESS OTHERWISE SPECIFIED:
DIMENSIONS ARE IN MILLIMETERS
SURFACE Ra: **1.6**
GENERAL TOLERANCES:
DIN ISO 2768 **(fH)**
BREAK SHARP EDGES

FINISH:
ANODIZED: ISO 7599:2018(E), AA 10, MATTE, BLACK DYE

BOTA systems
Hagenholzstrasse 85, 8050, Zurich, Switzerland
Email: info@botasys.com
Website: www.botasys.com
©2022 BOTA Systems AG. All rights reserved.

	NAME	DATE
DRAWN	EE	25/07/2022
CHECKED	EE	08/11/2022
APPROVED	EE	08/11/2022

MODEL DESCRIPTION: Adapter from Kinova Gen2 to Rokubi Side

MODEL NUMBER	DRAWING NUMBER	MODEL REVISION	DRAWING REVISION
RAW-ROKS-JACO	ROK-P011	A	A

WEIGHT	116.57 grams	MATERIAL	EN-AW-7075-T651	SCALE: 1:1	PAGE: 1 / 1	A3