Controller

10/28/2019 11:02 AM

Sheet: 1/4

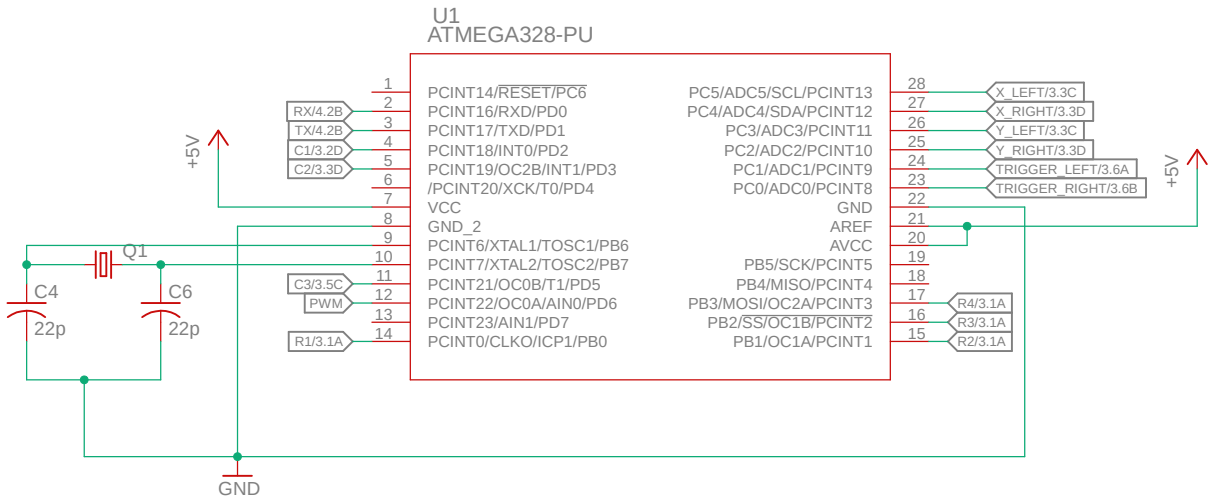

	Atmega2560
	Controller
	10/28/2019 11:02 AM
	Sheet: 2/4

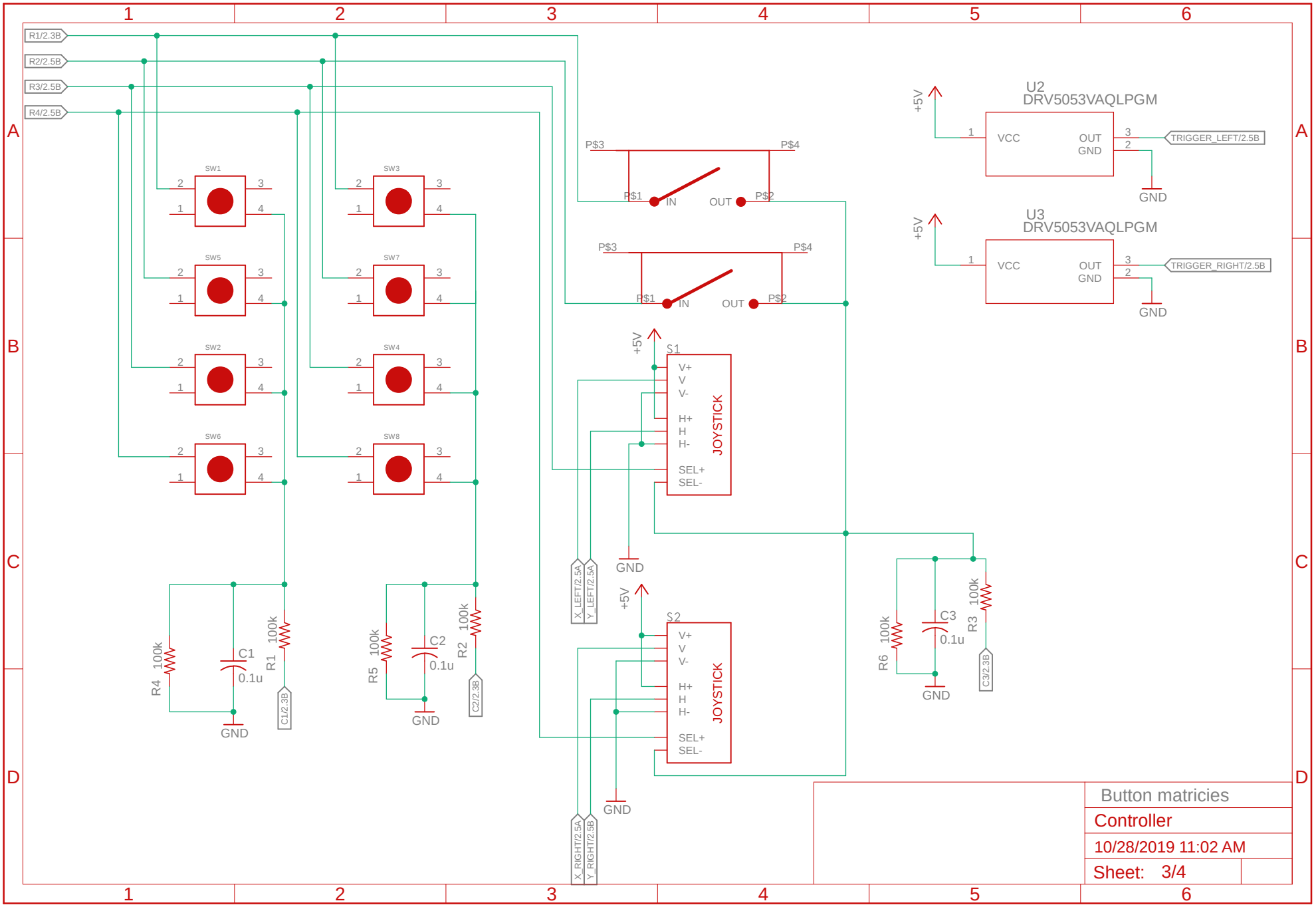
R1/2.3B
R2/2.5B
R3/2.5B
R4/2.5B
SW1
SW2
SW3
SW4
SW5
SW6
SW7
SW8
P$3
P$4
P$1
P$2
IN
OUT
U2
DRV5053VAQLPGM
U3
DRV5053VAQLPGM
VCC
OUT
GND
TRIGGER_LEFT/2.5B
TRIGGER_RIGHT/2.5B
+5V
S1
S2
JOYSTICK
V+
V
V-
H+
H
H-
SEL+
SEL-
X_LEFT/2.5A
Y_LEFT/2.5A
X_RIGHT/2.5A
Y_RIGHT/2.5B
R1 100k
R2 100k
R3 100k
R4 100k
R5 100k
R6 100k
C1 0.1u
C2 0.1u
C3 0.1u
C1/2.3B
C2/2.3B
C3/2.3B
GND
Button matricies
Controller
10/28/2019 11:02 AM
Sheet: 3/4

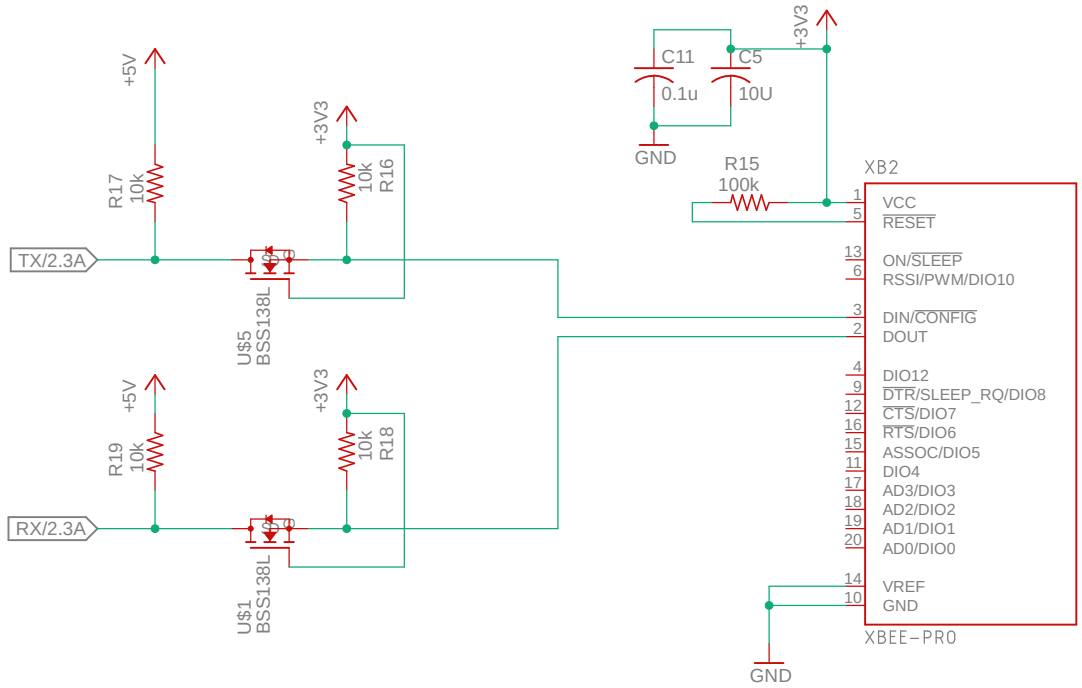

	XBee
	Controller
	10/28/2019 11:02 AM
	Sheet: 4/4