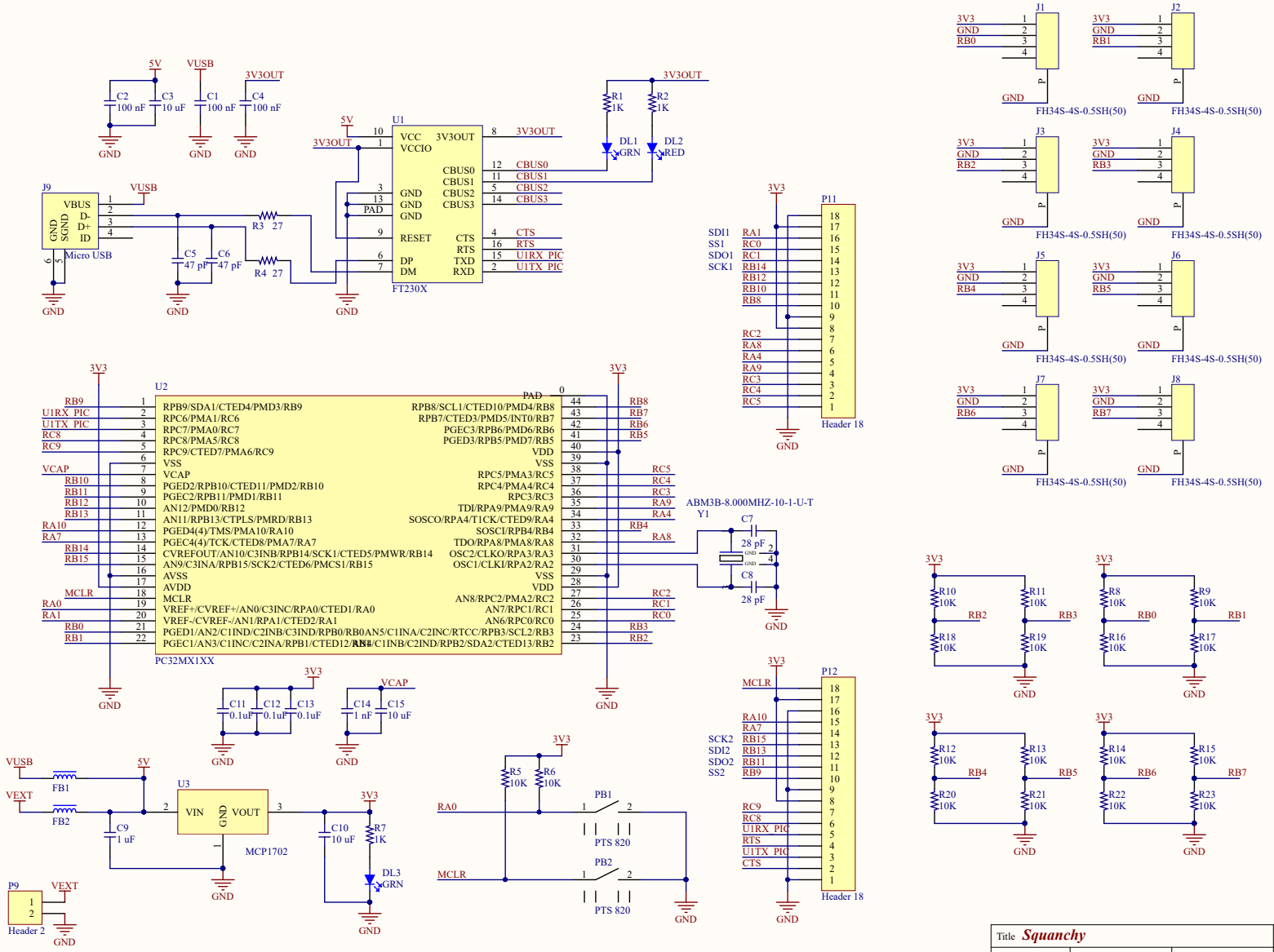

Title *Squanchy*		
Size: B	Number:1	Revision:1
Date: 10/19/2017	Time: 4:03:17 PM	Sheet1 of 1
File: C:\Users\Public\Documents\Altium\AD13\VirtualBuilds\PIC32MX_Tracking_v2\PIC32MX_Tracking.SchDoc		