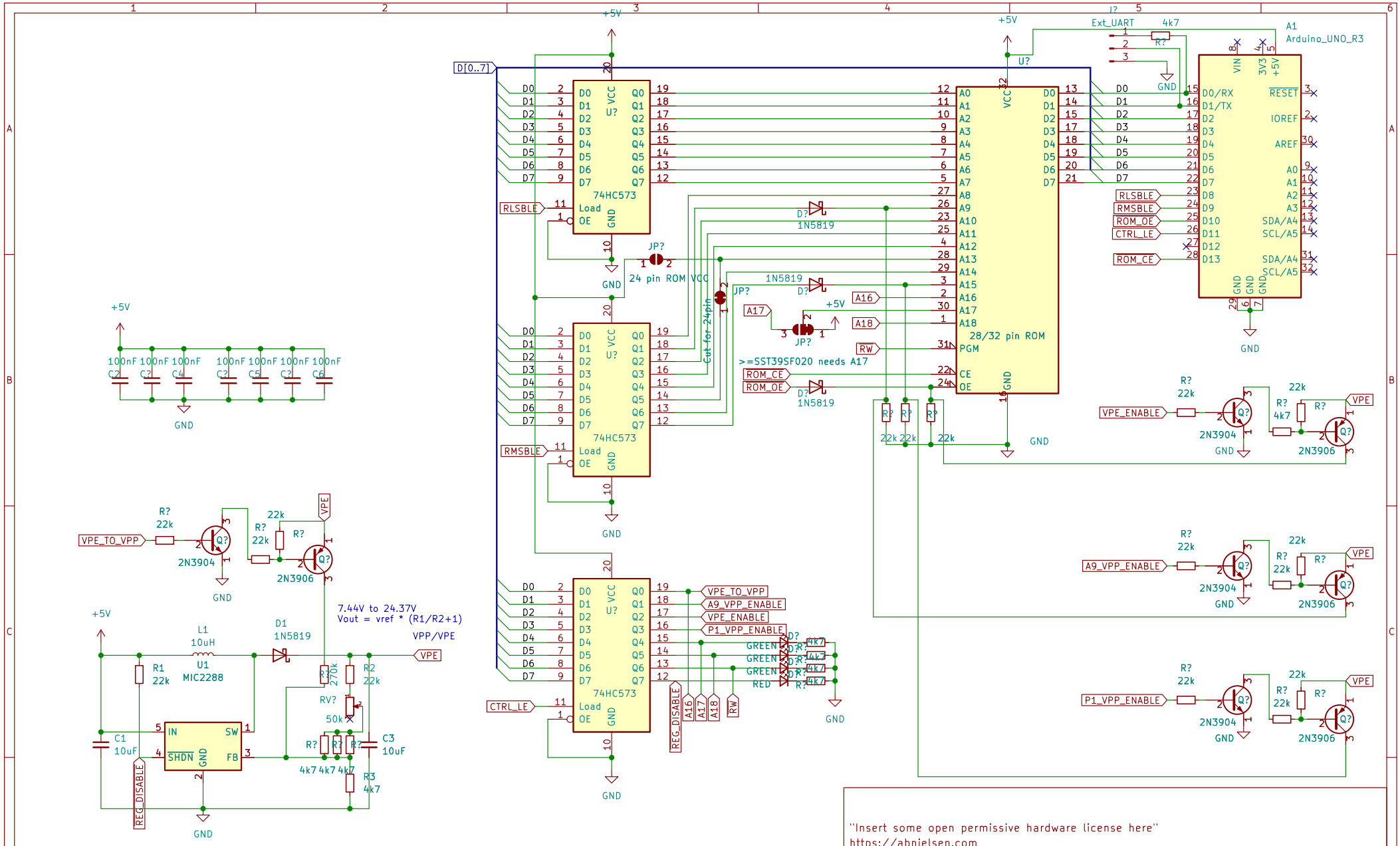

"Insert some open permissive hardware license here"
https://abnielsen.com
Anders Nielsen

Sheet: /
File: W27C512Programmer.kicad_sch

Title: Relatively Universal ROM Programmer

Size: A4	Date:	Rev: 0
KiCad E.D.A. kicad (6.0.7-1)-1		Id: 1/1