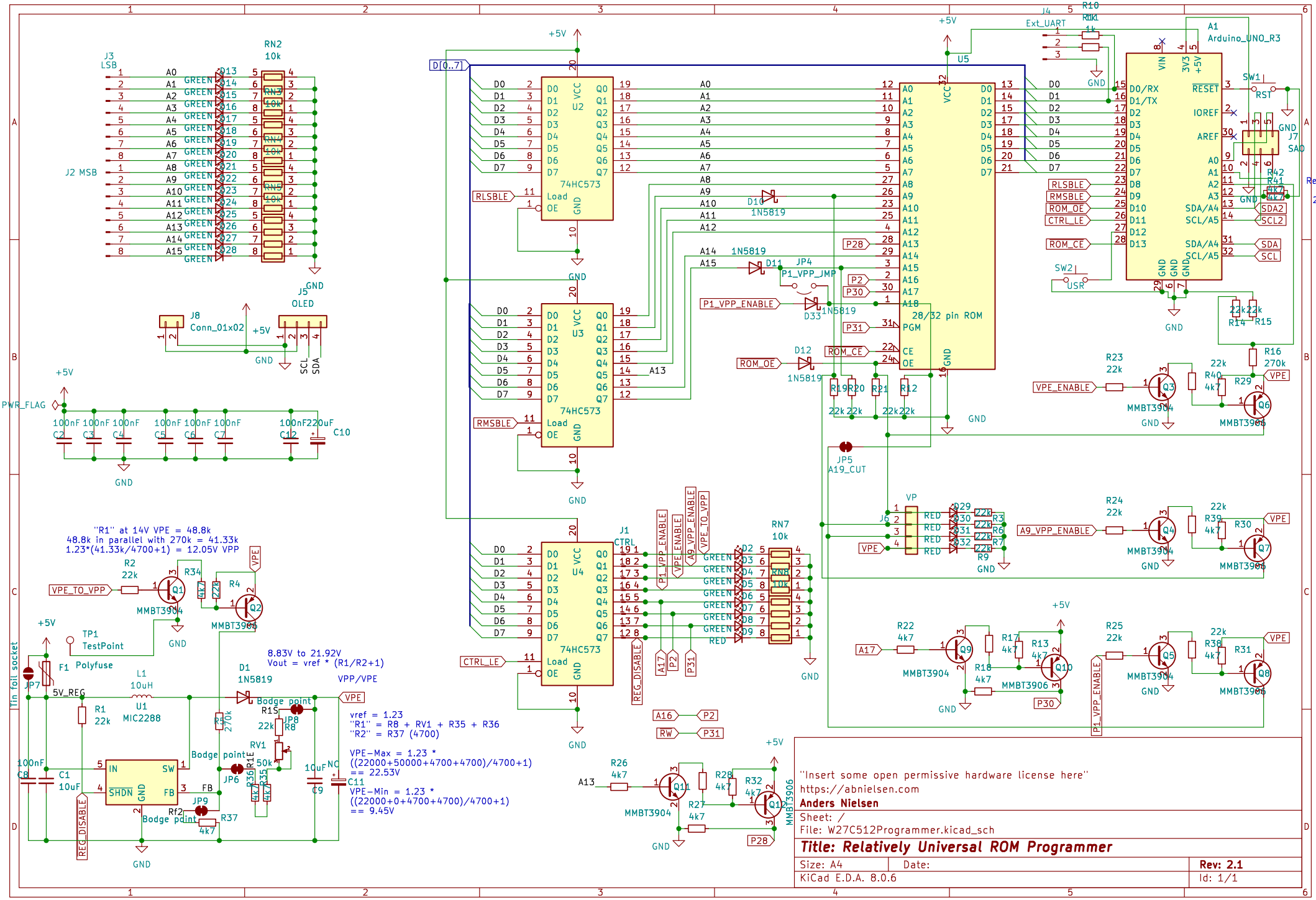
"R1" at 14V VPE = 48.8k
48.8k in parallel with 270k = 41.33k
1.23*(41.33k/4700+1) = 12.05V VPP
8.83V to 21.92V
Vout = vref * (R1/R2+1)
vref = 1.23
"R1" = R8 + RV1 + R35 + R36
"R2" = R37 (4700)
VPE-Max = 1.23 *
((22000+50000+4700+4700)/4700+1)
== 22.53V
VPE-Min = 1.23 *
((22000+0+4700+4700)/4700+1)
== 9.45V
"Insert some open permissive hardware license here"
https://abnielsen.com
Anders Nielsen
Sheet: /
File: W27C512Programmer.kicad_sch
Title: Relatively Universal ROM Programmer
Size: A4
Date:
Rev: 2.1
KiCad E.D.A. 8.0.6
Id: 1/1