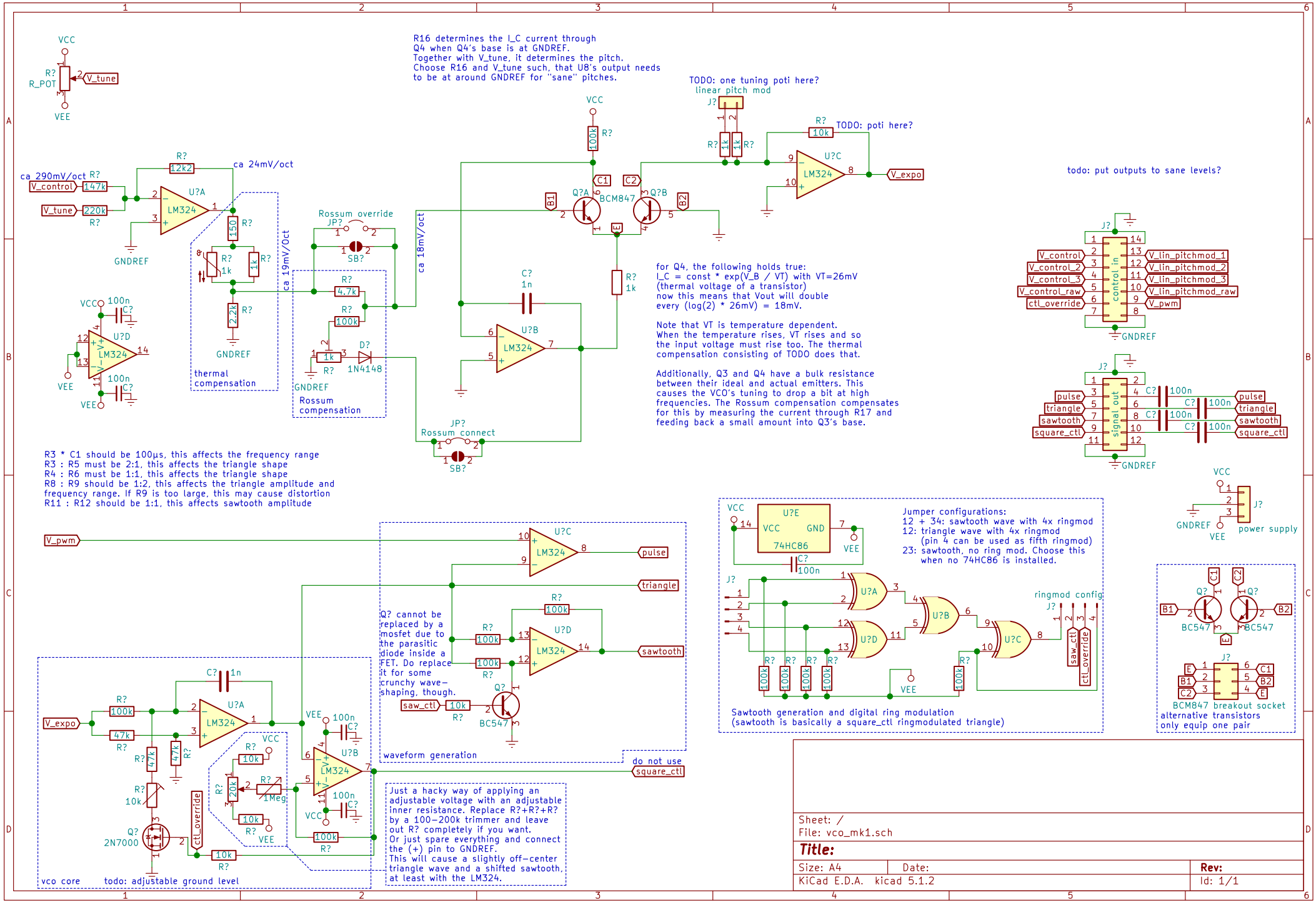

If R8 was connected to GNDREF, the triangle would be centered around GNDREF, but only if the output of the comparator U3 would swing between Vcc and Vee. However, U3 swings between less-than-Vcc and