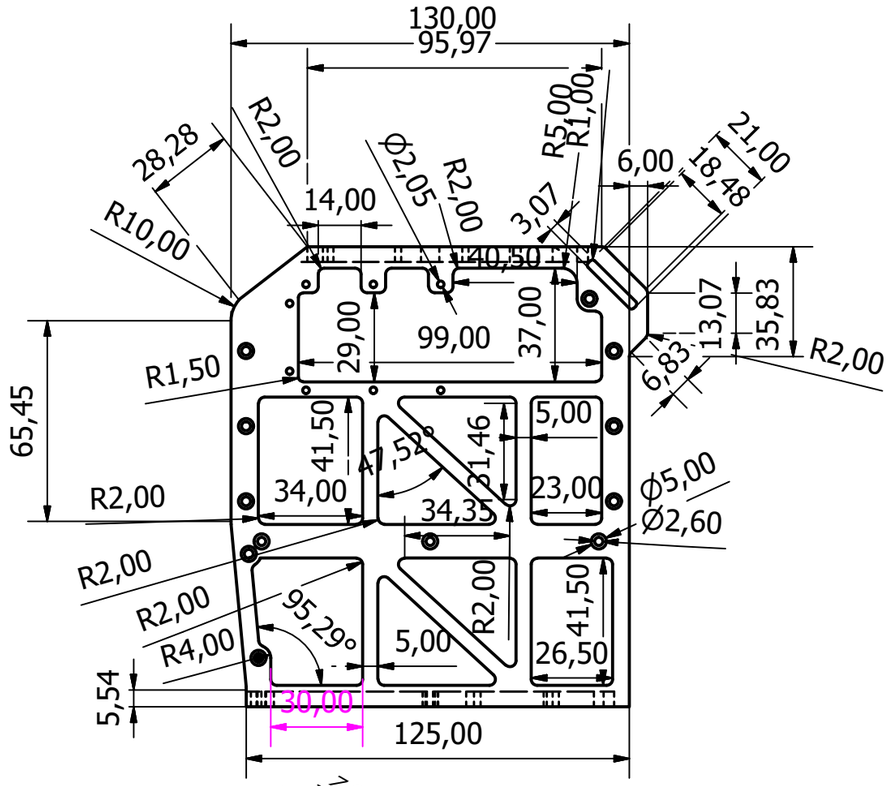

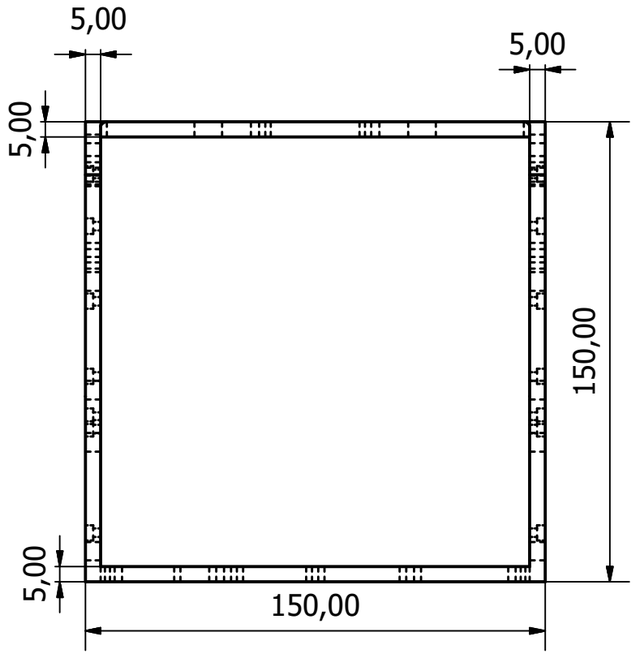

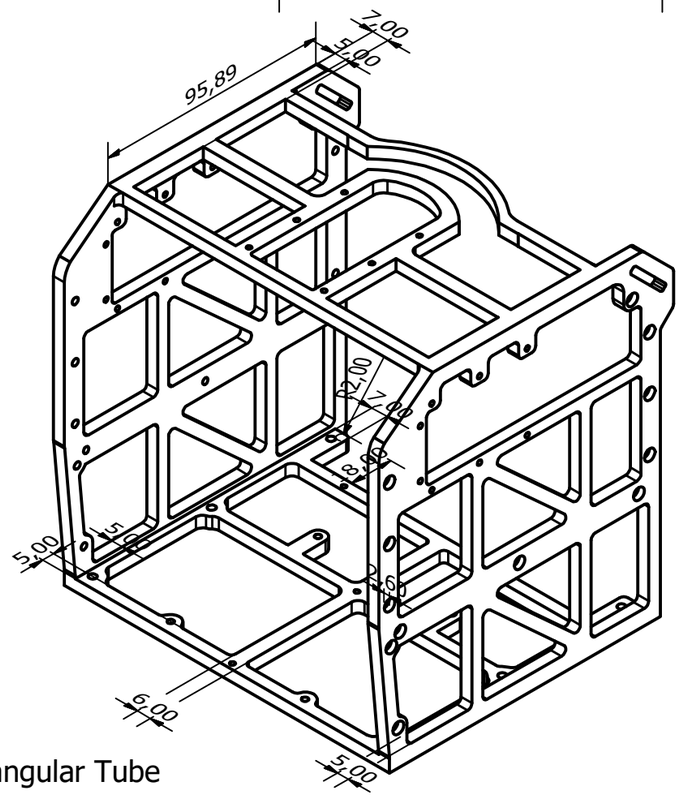

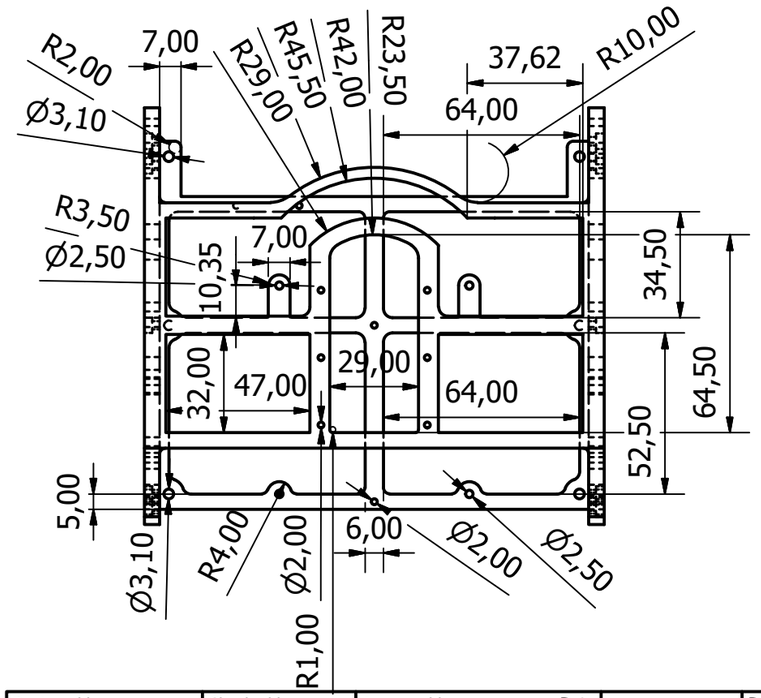

Material: AlMg3 150x150x5 Rectangular Tube
Amount: 5
Contact: me@jgueldenstein.de

Designed by	Checked by	Approved by	Date		Date	
Jasper					11.04.2019	

torso_top	Edition	Sheet 1 / 1