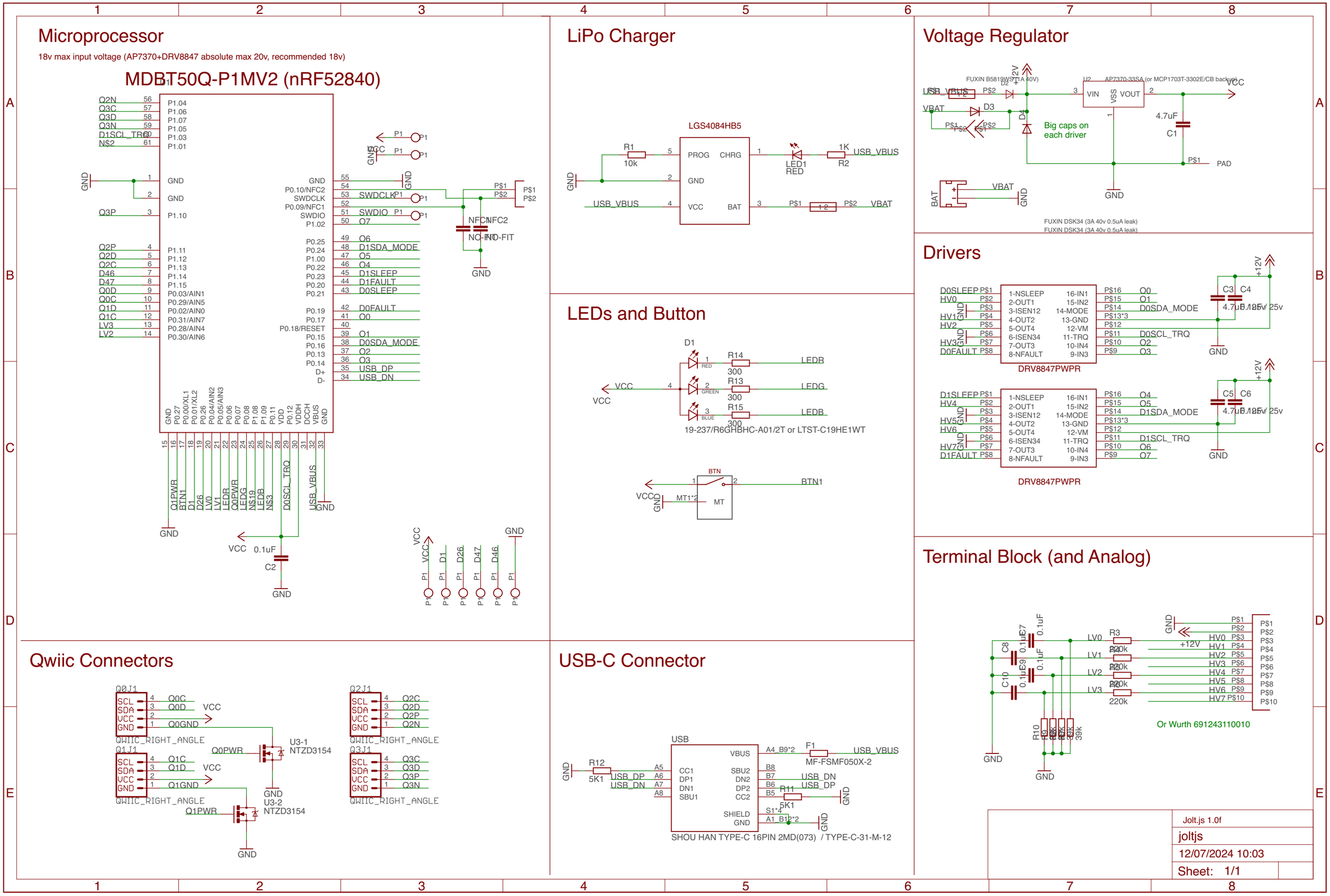
Microprocessor
18v max input voltage (AP7370+DRV8847 absolute max 20v, recommended 18v)
MDBT50Q-P1MV2 (nRF52840)
LiPo Charger
LGS4084HB5
Voltage Regulator
FUXIN B5819WS(1A 40V)
AP7370-33SA (or MCP1703T-3302E/CB backup)
Big caps on each driver
FUXIN DSK34 (3A 40v 0.5uA leak)
FUXIN DSK34 (3A 40v 0.5uA leak)
Drivers
DRV8847PWPR
DRV8847PWPR
LEDs and Button
19-237/R6GHBHC-A01/2T or LTST-C19HE1WT
Terminal Block (and Analog)
Or Wurth 691243110010
Qwiic Connectors
QWIIC_RIGHT_ANGLE
U3-1 NTZD3154
U3-2 NTZD3154
USB-C Connector
SHOU HAN TYPE-C 16PIN 2MD(073) / TYPE-C-31-M-12
Jolt.js 1.0f
joltjs
12/07/2024 10:03
Sheet: 1/1