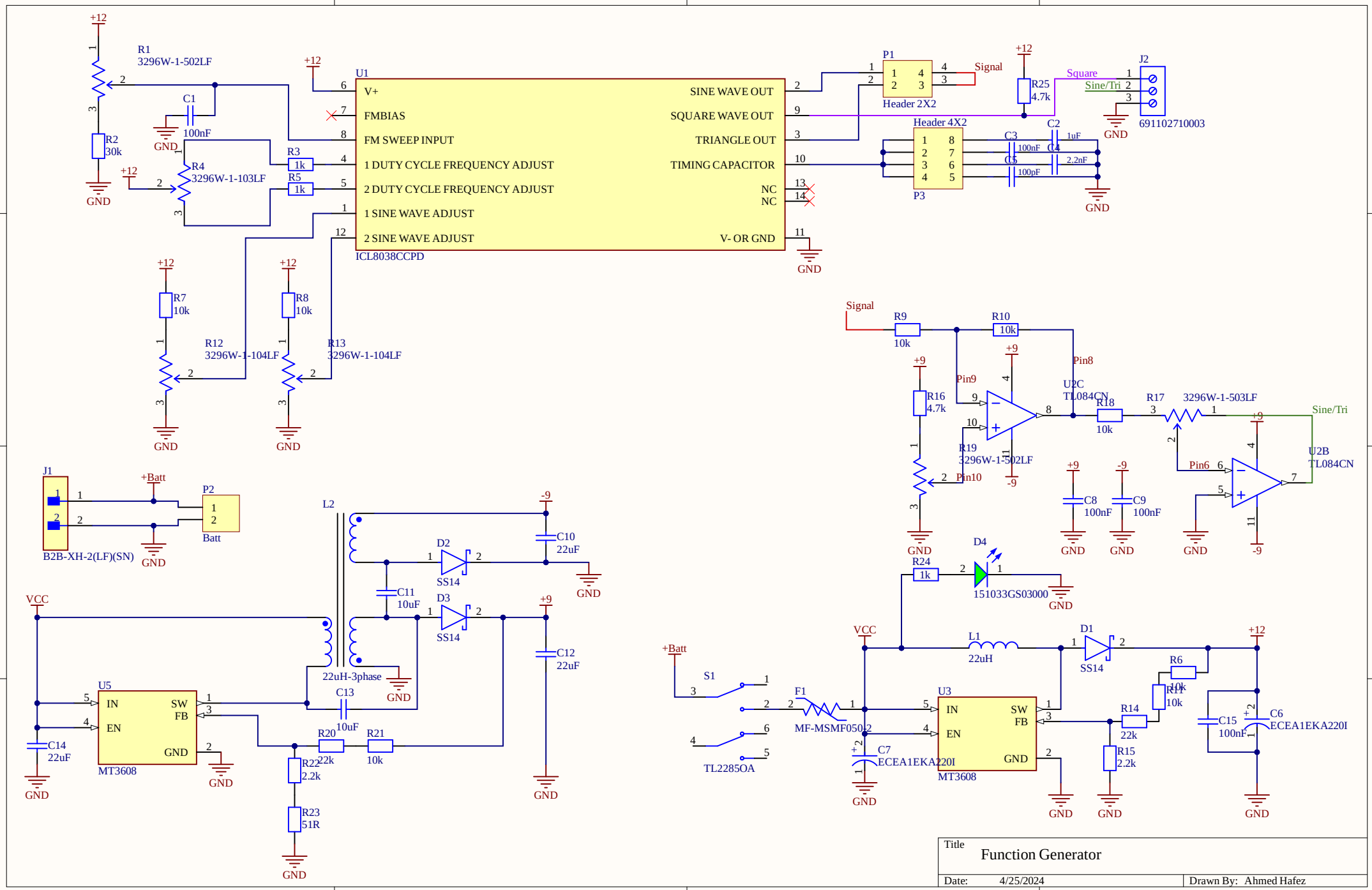

Title
Function Generator

Date: 4/25/2024 | Drawn By: Ahmed Hafez