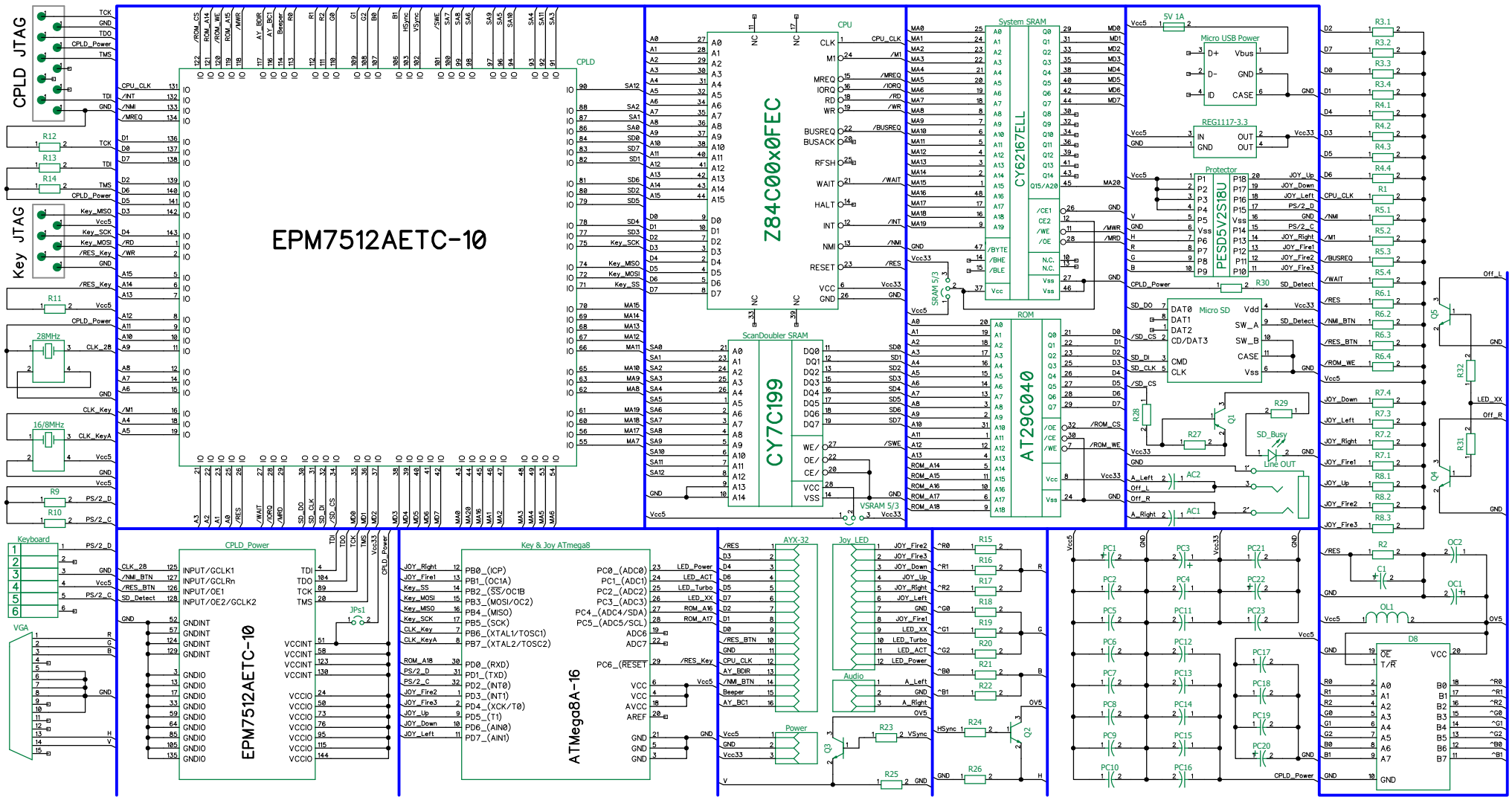
CPLD JTAG
Key JTAG
EPM7512AETC-10
CPLD
Z84C00x0FEC
CPU
CY7C199
ScanDoubler SRAM
System SRAM
CY62167ELL
ROM
AT29C040
5V 1A
Micro USB Power
REG1117-3.3
Protector
PESD5V2S18U
Micro SD
Line OUT
Keyboard
VGA
CPLD_Power
EPM7512AETC-10
Key & Joy ATmega8
ATMega8A-16
AYX-32
Joy_LED
Audio
Power