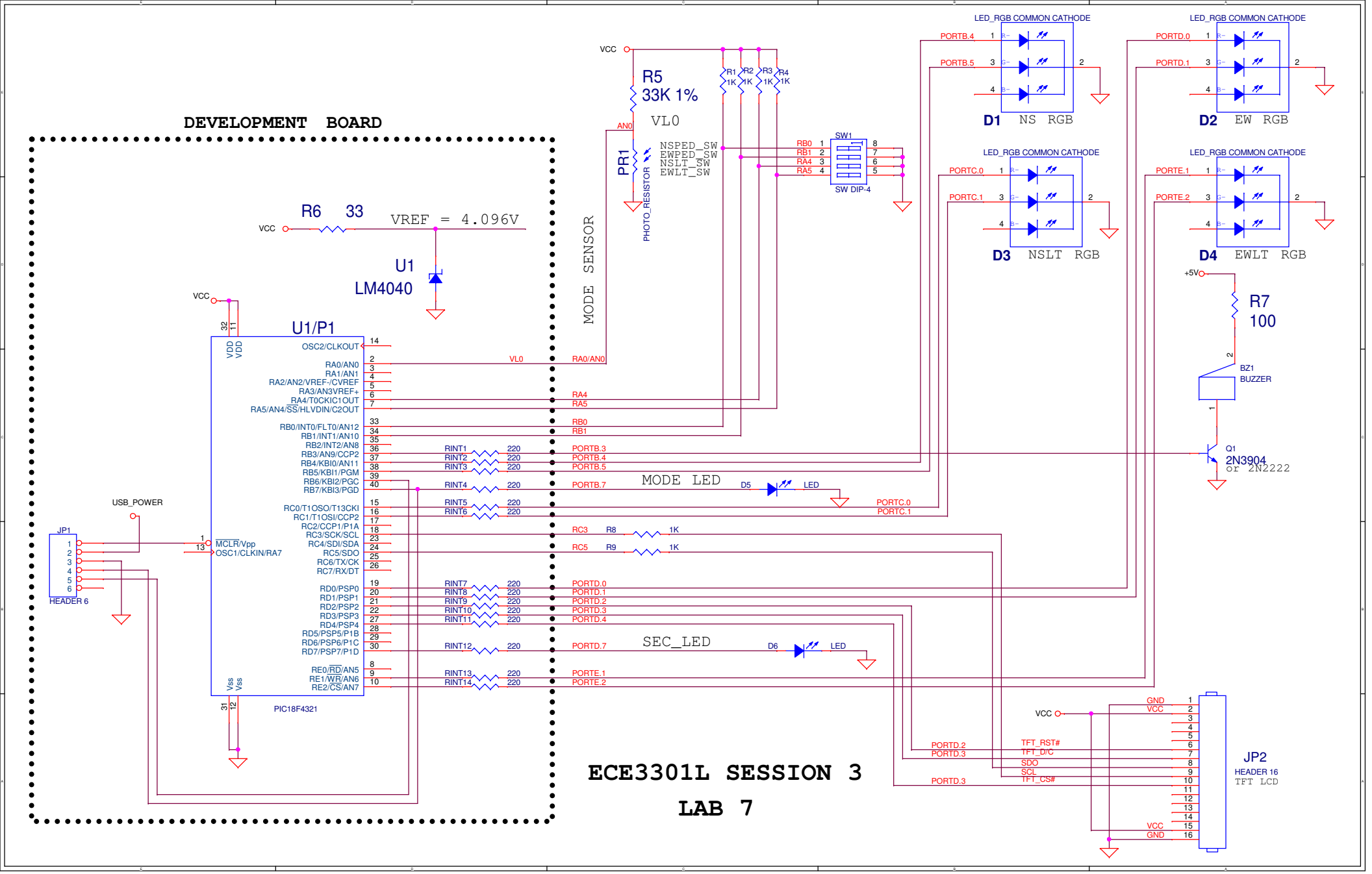
DEVELOPMENT BOARD
VCC
R6 33
VREF = 4.096V
U1
LM4040
U1/P1
PIC18F4321
OSC2/CLKOUT
RA0/AN0
RA1/AN1
RA2/AN2/VREF-/CVREF
RA3/AN3VREF+
RA4/T0CKIC1OUT
RA5/AN4/SS/HLVDIN/C2OUT
RB0/INT0/FLT0/AN12
RB1/INT1/AN10
RB2/INT2/AN8
RB3/AN9/CCP2
RB4/KBI0/AN11
RB5/KBI1/PGM
RB6/KBI2/PGC
RB7/KBI3/PGD
RC0/T1OSO/T13CKI
RC1/T1OSI/CCP2
RC2/CCP1/P1A
RC3/SCK/SCL
RC4/SDI/SDA
RC5/SDO
RC6/TX/CK
RC7/RX/DT
RD0/PSP0
RD1/PSP1
RD2/PSP2
RD3/PSP3
RD4/PSP4
RD5/PSP5/P1B
RD6/PSP6/P1C
RD7/PSP7/P1D
RE0/RD/AN5
RE1/WR/AN6
RE2/CS/AN7
MCLR/Vpp
OSC1/CLKIN/RA7
VDD
Vss
USB_POWER
JP1
HEADER 6
MODE SENSOR
PR1
PHOTO_RESISTOR
AN0
VL0
R5
33K 1%
R1 1K
R2 1K
R3 1K
R4 1K
NSPED_SW
EWPED_SW
NSLT_SW
EWLT_SW
SW1
SW DIP-4
RB0
RB1
RA4
RA5
RA0/AN0
RINT1 220
RINT2 220
RINT3 220
RINT4 220
RINT5 220
RINT6 220
RINT7 220
RINT8 220
RINT9 220
RINT10 220
RINT11 220
RINT12 220
RINT13 220
RINT14 220
PORTB.3
PORTB.4
PORTB.5
PORTB.7
PORTC.0
PORTC.1
RC3
RC5
R8 1K
R9 1K
PORTD.0
PORTD.1
PORTD.2
PORTD.3
PORTD.4
PORTD.7
PORTE.1
PORTE.2
MODE LED
D5
LED
SEC_LED
D6
LED
LED_RGB COMMON CATHODE
D1 NS RGB
D2 EW RGB
D3 NSLT RGB
D4 EWLT RGB
+5V
R7
100
BZ1
BUZZER
Q1
2N3904
or 2N2222
JP2
HEADER 16
TFT LCD
GND
TFT_RST#
TFT_D/C
SDO
SCL
TFT_CS#
ECE3301L SESSION 3
LAB 7