DIMENSIONS WITHOUT TOLERANCES
One decimal (.0)
Two decimals (.00)

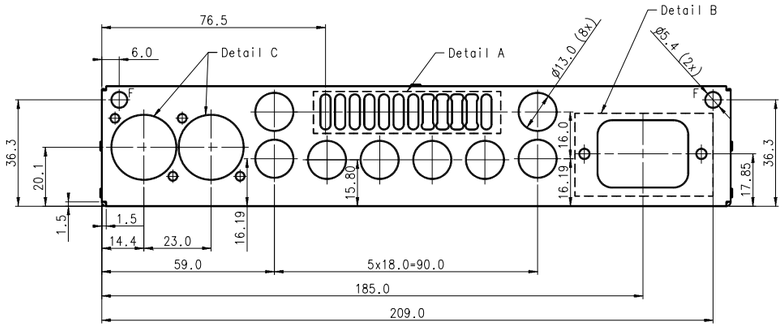

Screen print	
Reference no.	4008 127 0420
Colour	Black 3C 2X
Text font	-
Scale	1:1.5

NOTE

In this screen print sketch font, size and colour are not correctly expressed. This sketch is only intended as a guide.

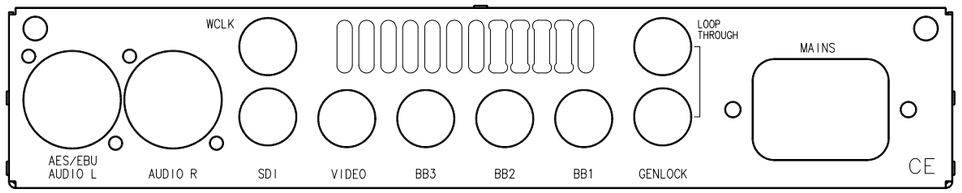

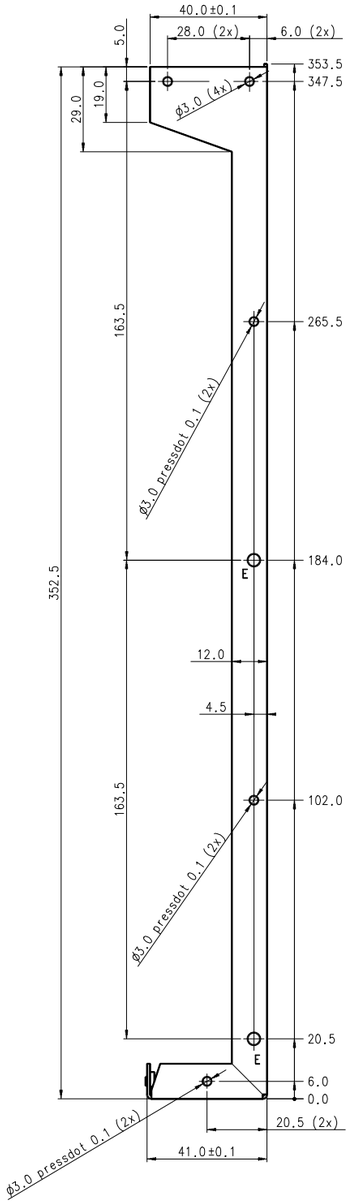

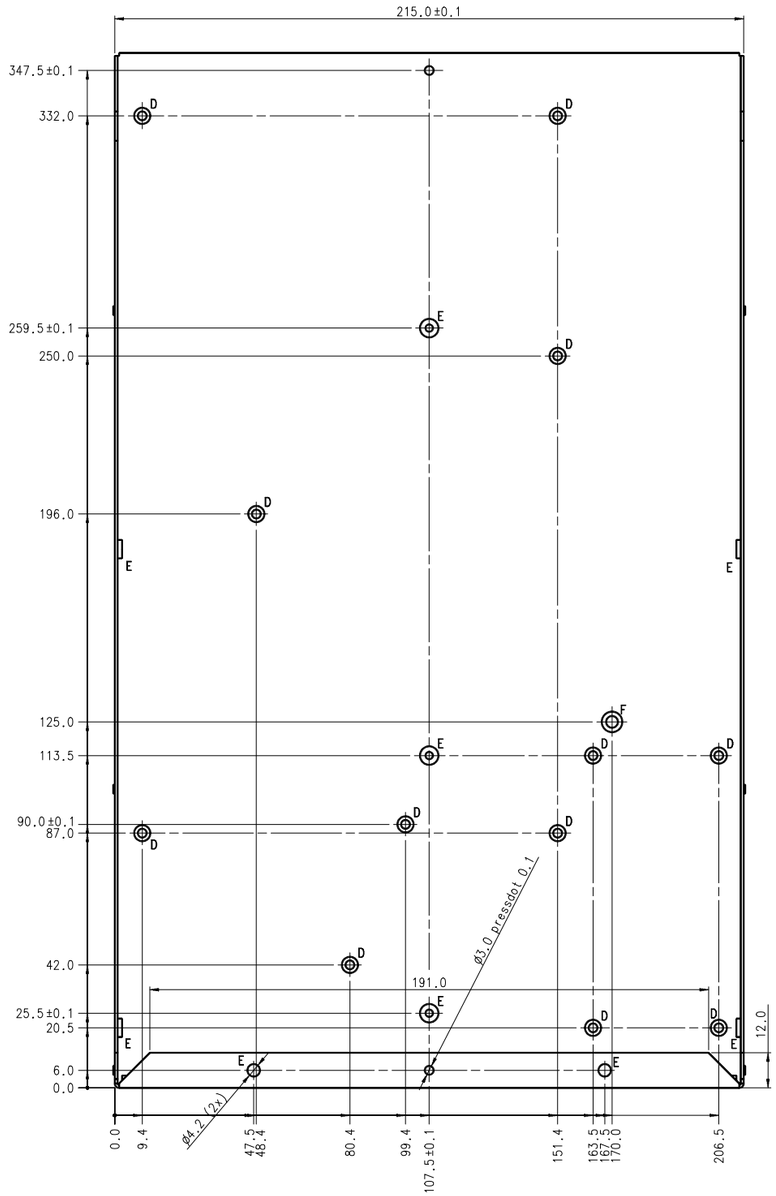

Pos.	Hole	Item	Purchasing no.
D	ø4.3	Minoff-M3-004-S-5mm-Z	1900001039 (12x)
E	ø4.2	S-M2.5-1	1900000956 (9x)
F	ø5.4	Minarb-M4-004-S-Z	1900001591 (3x)

A Detail A
Scale 2:1

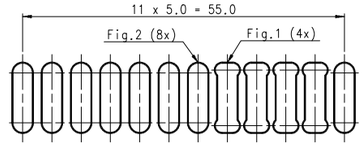

B Detail B
Scale 2:1

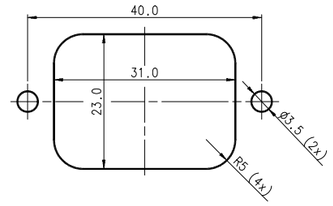

1 Fig.1
Scale 2:1

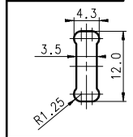

2 Fig.2
Scale 2:1

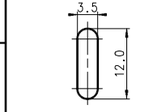

C Detail C
Scale 1:1

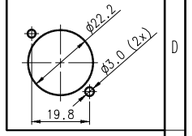

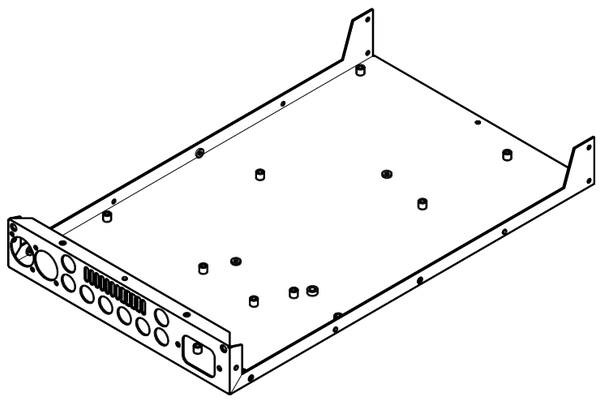

Bending radius: 0.5 mm

C00	120601	PET	C00	Changing holes from .4->.0. Changing tolerances. Pos. E S-M3-1->S-M2.5-1. Screen print changing "TSG"->"VIDEO". Earth symbols removed.
B00	011200	ADI	---	

MATERIAL:	Al99.5 2S 1/2H F11 1.0 mm
SURFACE TREATMENT:	Aludine 1500
COSTOMER ITEM NO.:	4008 107 59374
CUSTOMER/NO.:	612 PTV Technologies A/S
ITEM DESCRIPTION:	Outer Case PT5201
GPV ITEM NO.:	612-13016201 C00
PROJECT NO.:	11016200

GPV Koncernen
GPV International A/S

DESCRIPTION

THIS DRAWING REMAINS THE EXCLUSIVE PROPERTY OF GPV KONCERNEN. IT SHALL NOT BE COPIED, REPRODUCED, DISCUSSED IN PART OR IN WHOLE, OR OTHERWISE MADE AVAILABLE TO THIRD PARTY WITHOUT OUR PREVIOUS WRITTEN CONSENT.

	DATE	SIGN.
DRAWN BY	01-12-00	ADI
DESIGNED BY	01-12-00	ADI
CHECKED QC		
UPDATED IN PRODDI		

PAGE 1 OF 1

CAD DRAWING DO NOT CHANGE MANUALLY

SCALE: 1 : 1

A1