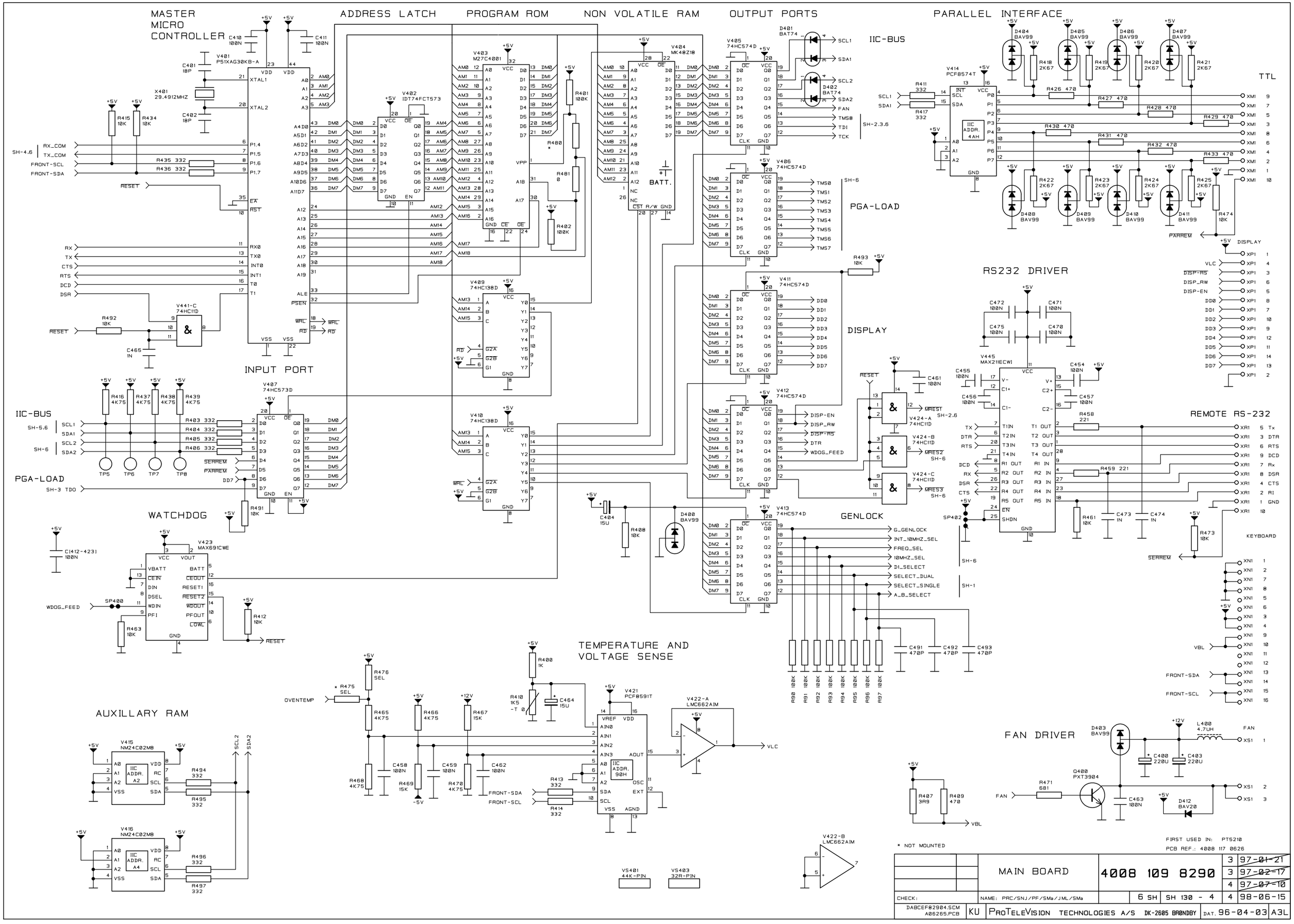
MASTER MICRO CONTROLLER
ADDRESS LATCH
PROGRAM ROM
NON VOLATILE RAM
OUTPUT PORTS
PARALLEL INTERFACE
IIC-BUS
TTL
PGA-LOAD
DISPLAY
RS232 DRIVER
REMOTE RS-232
INPUT PORT
WATCHDOG
GENLOCK
KEYBOARD
AUXILLARY RAM
TEMPERATURE AND VOLTAGE SENSE
FAN DRIVER
* NOT MOUNTED
MAIN BOARD
4008 109 8290
FIRST USED IN: PT5210
PCB REF.: 4008 117 0626
CHECK:
NAME: PRC/SNJ/PF/SMa/JML/SMa
6 SH SH 130 - 4
DABCEF82904.SCM
A06265.PCB
KU
PROTELEVISION TECHNOLOGIES A/S DK-2605 BRØNDBY
DAT. 96-04-03
A3L
3 97-01-21
3 97-02-17
4 97-07-10
4 98-06-15