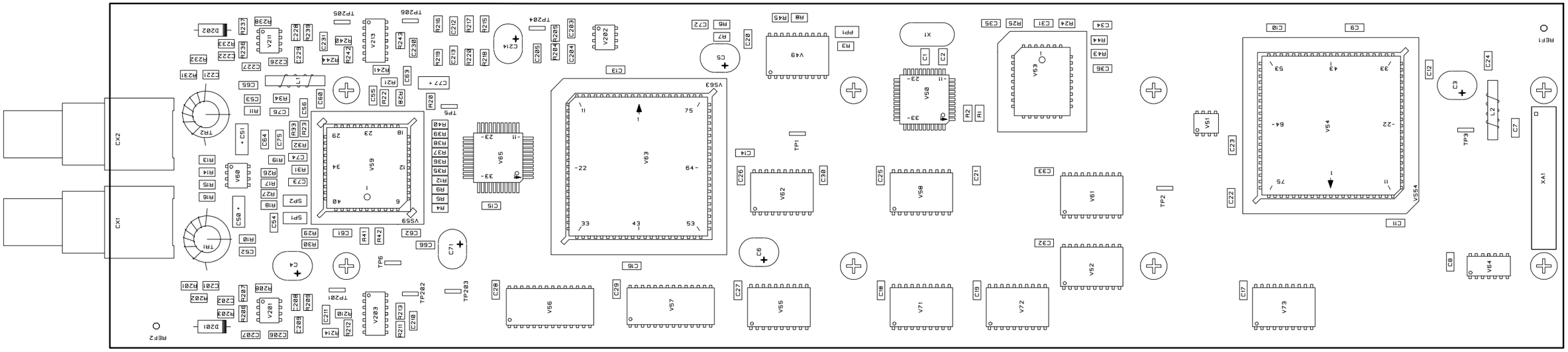
CX2
CX1
TR2
TR1
V60
V211
V219
V202
V59
V559
V63
V563
V65
V49
V58
V53
V51
V54
V554
V61
V52
V62
V56
V57
V55
V71
V72
V73
V64
V201
V203
XA1
REF1
REF2
D202
D201
TP1
TP2
TP3
TP5
TP6
TP201
TP202
TP203
TP204
TP205
TP206
SP1
SP2
PP1
X1
L2
C3
C4
C5
C6
C7
C71
C214
C13
C14
C15
C16
C11
C12
C9
C10
C20
C21
C22
C23
C24
C25
C26
C27
C28
C29
C30
C31
C32
C33
C34
C35
C36
C18
C19
C17
C8
C1
C2
R1
R2
R3
R45
R8
R6
R7
R4
R5
R9
R12
R35
R36
R37
R38
R39
R40
R41
R42
R29
R30
R61
R62
R66
R10
R52
R13
R14
R15
R16
R18
R19
R26
R27
R31
R32
R33
R23
R34
R11
R76
R55
R22
R28
R20
R21
R241
R243
R244
R242
R240
R238
R237
R239
R229
R232
R231
R233
R234
R24
R25
R44
R43
R215
R216
R217
R218
R219
R228
R213
R212
R230
R203
R204
R207
R208
R209
R210
R211
R213
R214
R201
R202
R206
C77
C55
C56
C60
C53
C76
C51
C64
C75
C74
C73
C54
C50
C52
C61
C62
C66
C63
C65
C227
C226
C223
C222
C221
C231
C229
C212
C203
C204
C205
C208
C207
C201
C202
C211
C218
C28
C29
C27
C26
C30
C25
C21
C33
C32
C18
C19
C17
C8
C12
C24
C7
C23
C22
C11
C10
C9
C20
C13
C14
C15
C16
C1
C2
C3
C4
C5
C6
C71
C214
C51
C50
C77
C55
C56
C60
C53
C76
C64
C75
C74
C73
C54
C52
C61
C62
C66
C63
C65
C227
C226
C223
C222
C221
C231
C229
C212
C203
C204
C205
C208
C207
C201
C202
C211
C218
C28
C29
C27
C26
C30
C25
C21
C33
C32
C18
C19
C17
C8
C12
C24
C7
C23
C22
C11
C10
C9
C20
C13
C14
C15
C16
R1
R2
R3
R45
R8
R6
R7
R4
R5
R9
R12
R35
R36
R37
R38
R39
R40
R41
R42
R29
R30
R61
R62
R66
R10
R52
R13
R14
R15
R16
R18
R19
R26
R27
R31
R32
R33
R23
R34
R11
R76
R55
R22
R28
R20
R21
R241
R243
R244
R242
R240
R238
R237
R239
R229
R232
R231
R233
R234
R24
R25
R44
R43
R215
R216
R217
R218
R219
R228
R213
R212
R230
R203
R204
R207
R208
R209
R210
R211
R213
R214
R201
R202
R206
TP1
TP2
TP3
TP5
TP6
TP201
TP202
TP203
TP204
TP205
TP206
SP1
SP2
PP1
X1
L2
C3
C4
C5
C6
C7
C71
C214
C13
C14
C15
C16
C11
C12
C9
C10
C20
C21
C22
C23
C24
C25
C26
C27
C28
C29
C30
C31
C32
C33
C34
C35
C36
C18
C19
C17
C8
C1
C2
R1
R2
R3
R45
R8
R6
R7
R4
R5
R9
R12
R35
R36
R37
R38
R39
R40
R41
R42
R29
R30
R61
R62
R66
R10
R52
R13
R14
R15
R16
R18
R19
R26
R27
R31
R32
R33
R23
R34
R11
R76
R55
R22
R28
R20
R21
R241
R243
R244
R242
R240
R238
R237
R239
R229
R232
R231
R233
R234
R24
R25
R44
R43
R215
R216
R217
R218
R219
R228
R213
R212
R230
R203
R204
R207
R208
R209
R210
R211
R213
R214
R201
R202
R206
V59
V559
V63
V563
V65
V49
V58
V53
V51
V54
V554
V61
V52
V62
V56
V57
V55
V71
V72
V73
V64
V201
V203
V211
V219
V202
V60
D202
D201
TR2
TR1
CX2
CX1
XA1
REF1
REF2

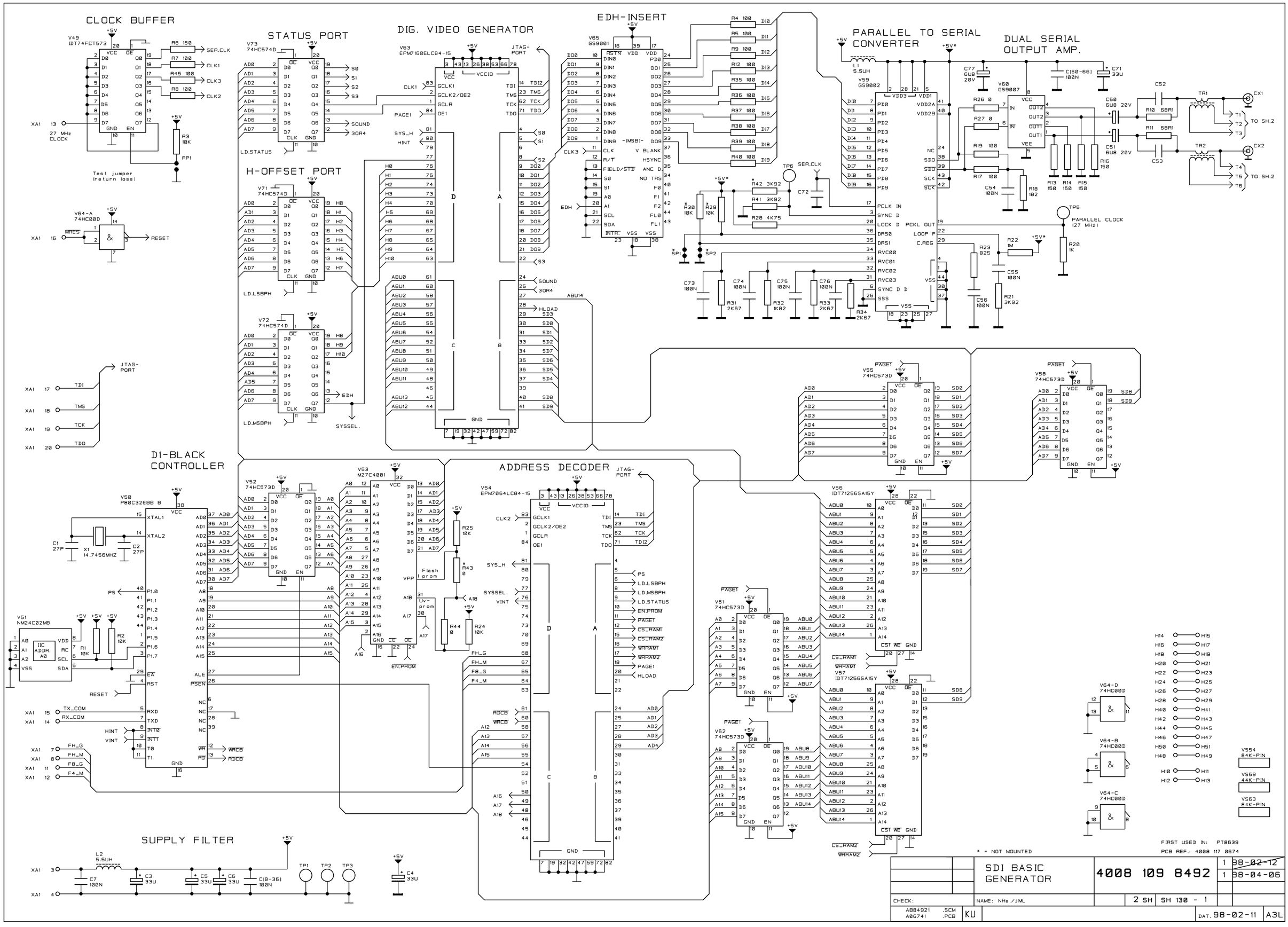
CLOCK BUFFER
V49 IDT74FCT573
27 MHz CLOCK
Test jumper (return loss)
STATUS PORT
V73 74HC574D
LD.STATUS
H-OFFSET PORT
V71 74HC574D
LD.LSBPH
V72 74HC574D
LD.MSBPH
DIG. VIDEO GENERATOR
V63 EPM7160ELC84-15
JTAG-PORT
EDH-INSERT
V65 GS9001
PARALLEL TO SERIAL CONVERTER
V59 GS9002
DUAL SERIAL OUTPUT AMP.
V60 GS9007
TO SH.2
PARALLEL CLOCK (27 MHz)
V64-A 74HC00D
RESET
D1-BLACK CONTROLLER
V50 P80C32EBB B
X1 14.7456MHZ
V51 NM24C02MB
IIC ADDR. A0
V52 74HC573D
V53 M27C4001
Flash prom
Uv-prom
EN.PROM
ADDRESS DECODER
V54 EPM7064LC84-15
V55 74HC573D
V56 IDT71256SA15Y
V57 IDT71256SA15Y
V58 74HC573D
V61 74HC573D
V62 74HC573D
V64-D 74HC00D
V64-B 74HC00D
V64-C 74HC00D
V554 84K-PIN
V559 44K-PIN
V563 84K-PIN
SUPPLY FILTER
* = NOT MOUNTED
FIRST USED IN: PT8639
PCB REF.: 4008 117 0674
SDI BASIC GENERATOR
4008 109 8492
1 98-02-12
1 98-04-06
CHECK:
NAME: NHa./JML
2 SH
SH 130 - 1
A884921 .SCM
A86741 .PCB
KU
DAT. 98-02-11
A3L

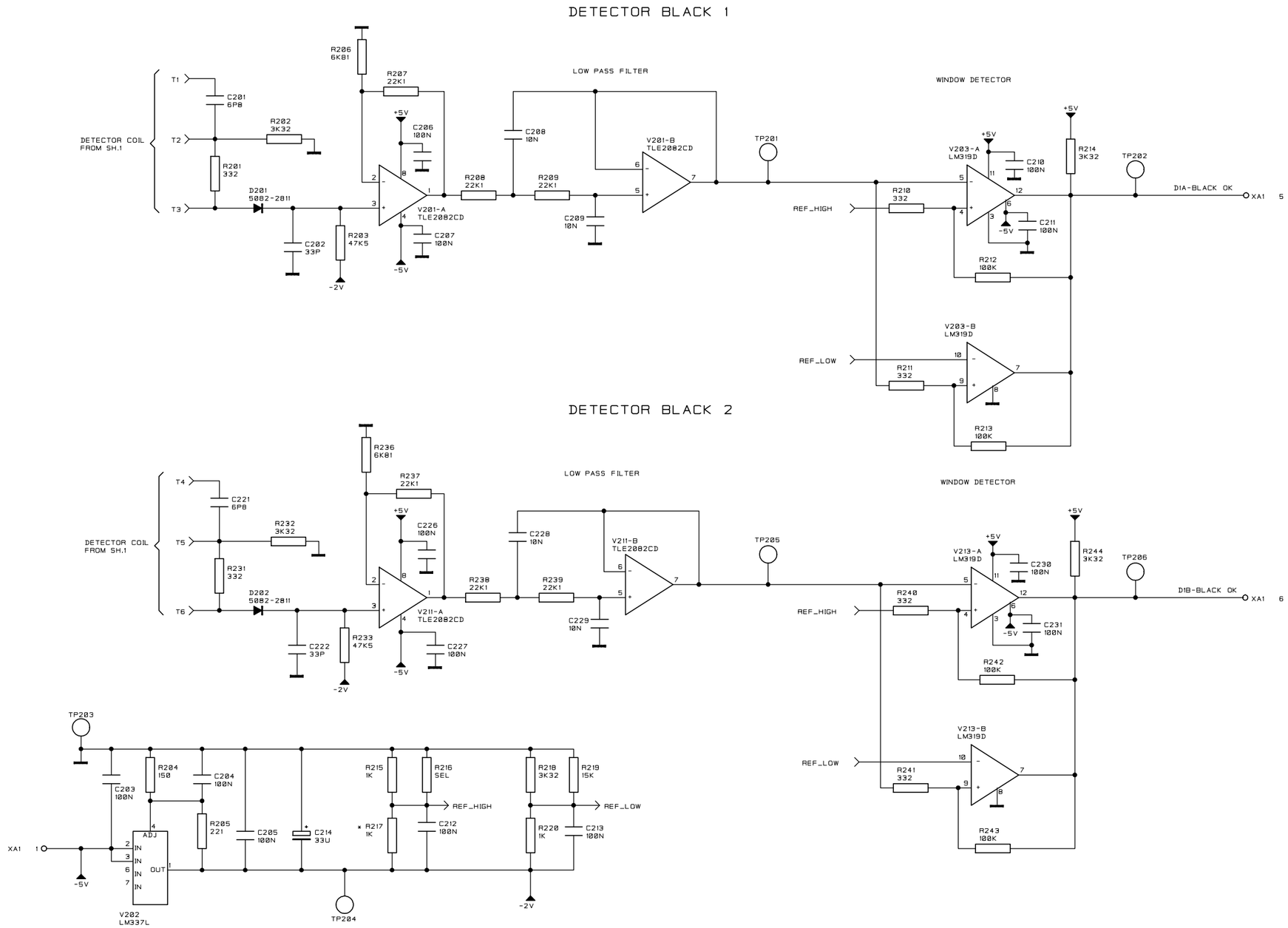

* NOT MOUNTED

FIRST USED IN: PT8639
PCB REF.: 4008 117 0674

		LEVEL DETECTOR SDI BASIC GENERATOR PT8639	4008 109 8492	1	~~98-02-12~~
				1	98-04-06
CHECK:		NAME: PF/JML	2 SH	SH 130 - 2	
BA84921 .SCM A06741 .PCB	KU		DAT. 98-02-11	A3L	