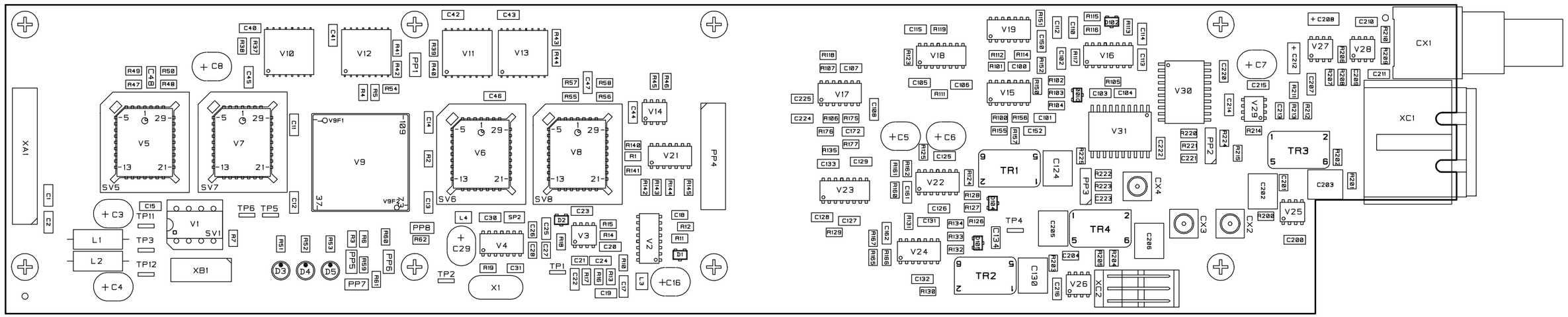
XA1
V5
V7
V9
V6
V8
V10
V12
V11
V13
V14
V21
V1
V2
V3
V4
V17
V18
V19
V15
V16
V30
V31
V22
V23
V24
V25
V26
V27
V28
V29
TR1
TR2
TR3
TR4
CX1
XC1
XC2
CX2
CX3
CX4
XB1
X1
L1
L2
L3
L4
C3
C4
C5
C6
C7
C8
C29
C16
TP1
TP2
TP3
TP4
TP5
TP6
TP11
TP12
PP1
PP2
PP3
PP4
PP5
PP6
PP7
PP8
D1
D2
D3
D4
D5
SV1
SV5
SV6
SV7
SV8
V9F1
V9F2

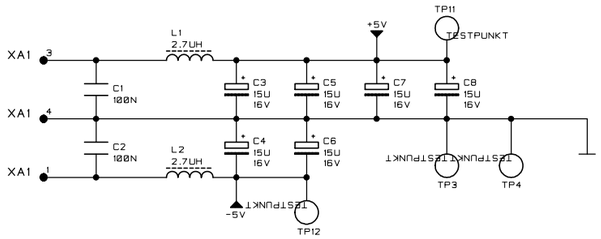

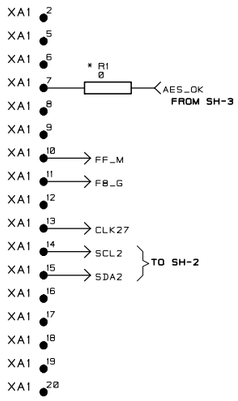

CONFIG PROM

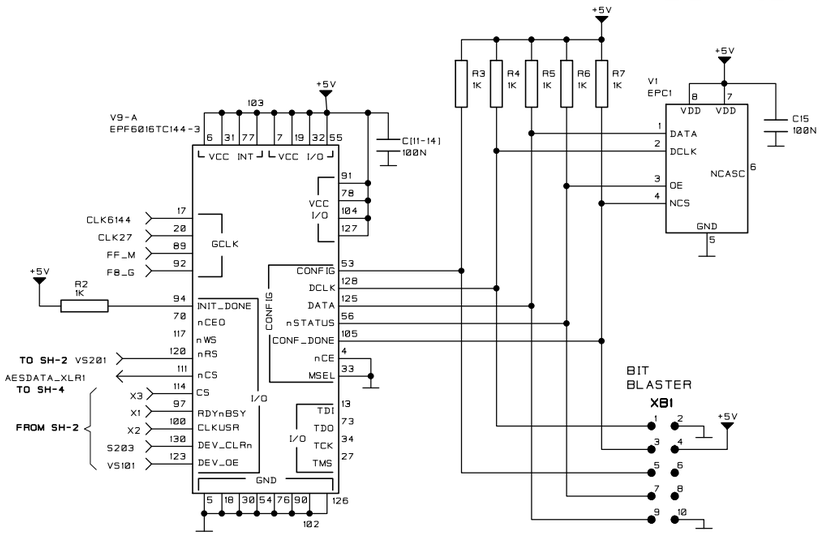

PHASE COMPERATOR

VCO FILTER

VCO

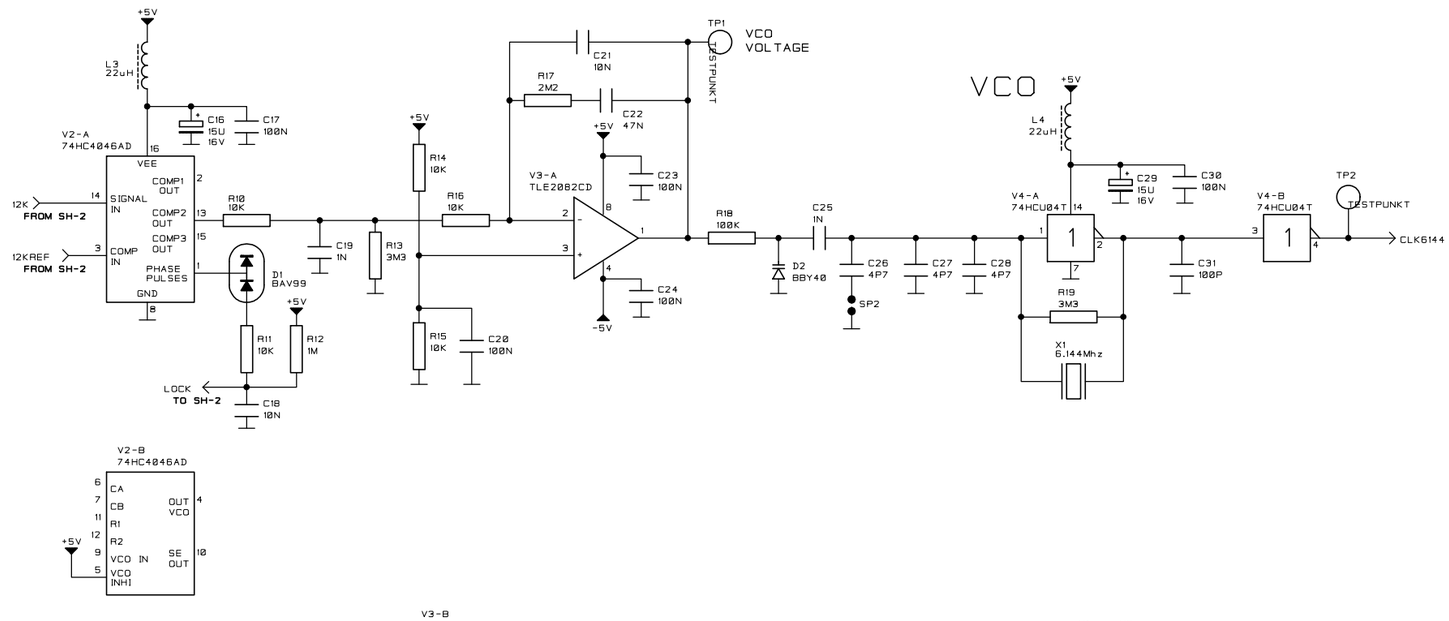

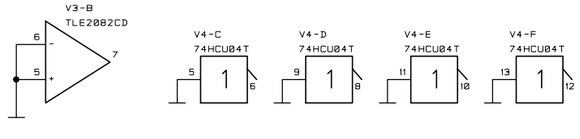

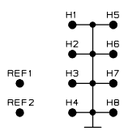

SV1
8-PIN
SOCKETS

* NOT MOUNTED

FIRST USED IN : PT8635

PCB REF.: 4008 117 0670

		DUAL AES/EBU AUDIO GENERATOR	4008 109 8490	1	~~98-04-24~~	
				1	~~98-06-10~~	
				2	98-06-30	
CHECK:		NAME: PF/JML	SCALE 1:1 / 4 SH / SH 130-1			
KU			DAT. 98-03-02	A3		

AUDIO DATA PROM (2)

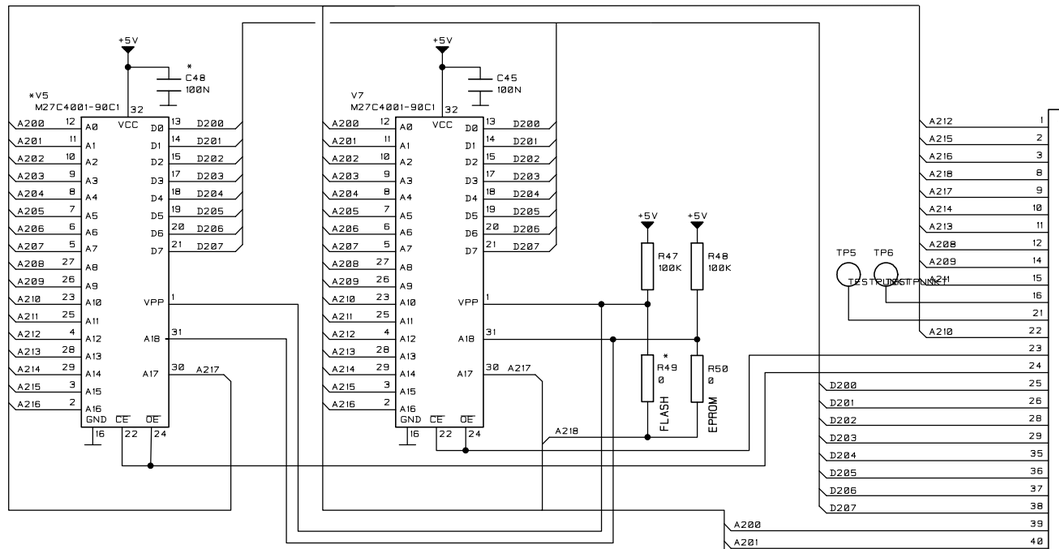

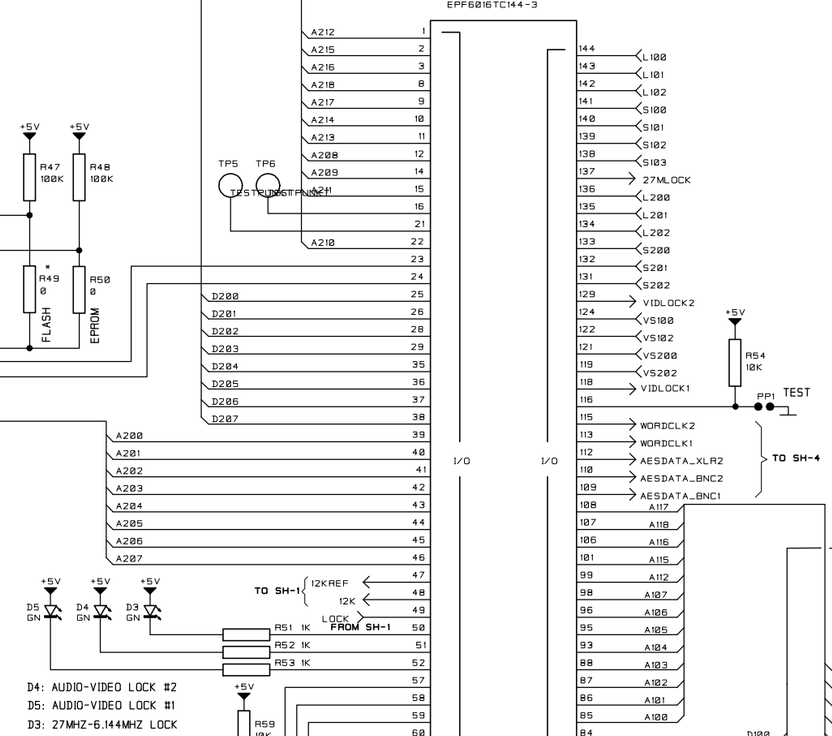

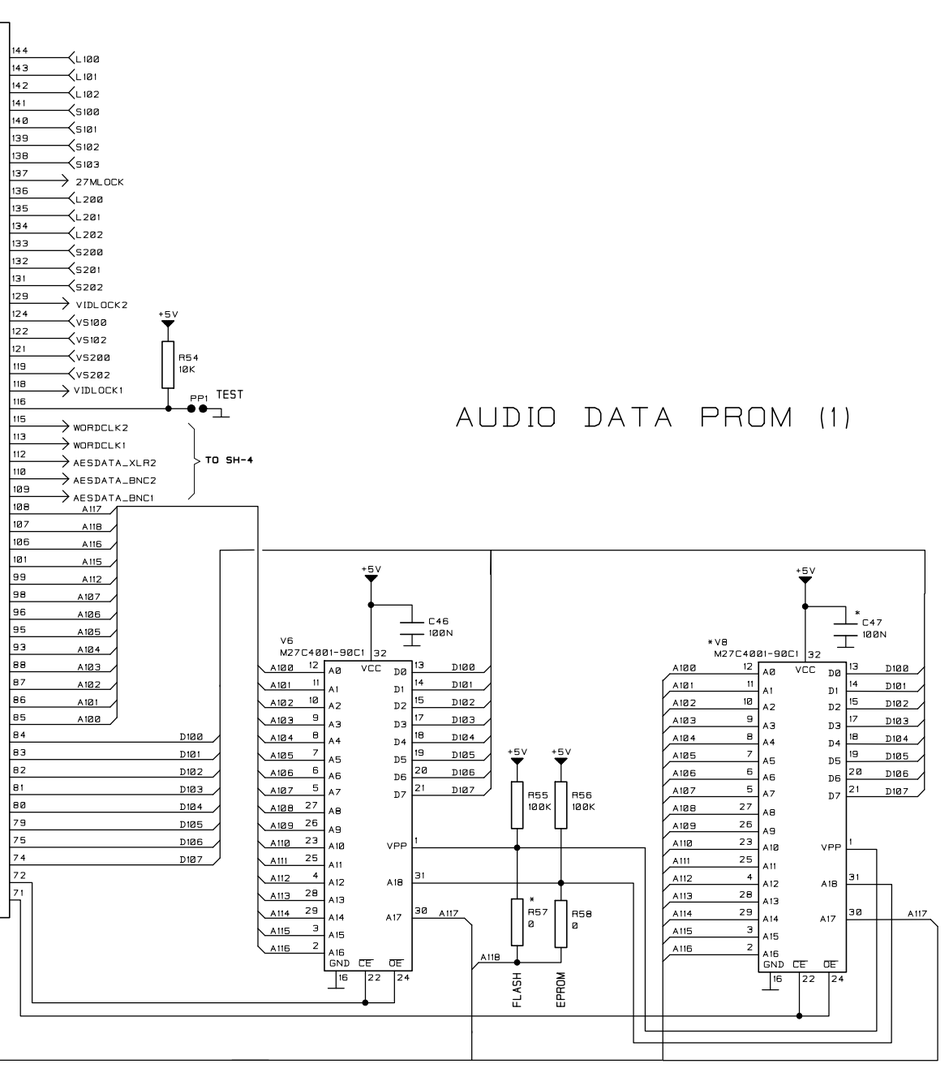

AUDIO DATA PROM (1)

E^2 PROM

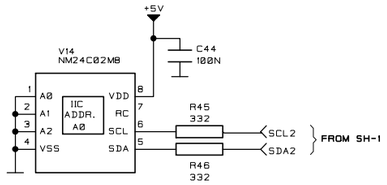

AUDIO SELECT

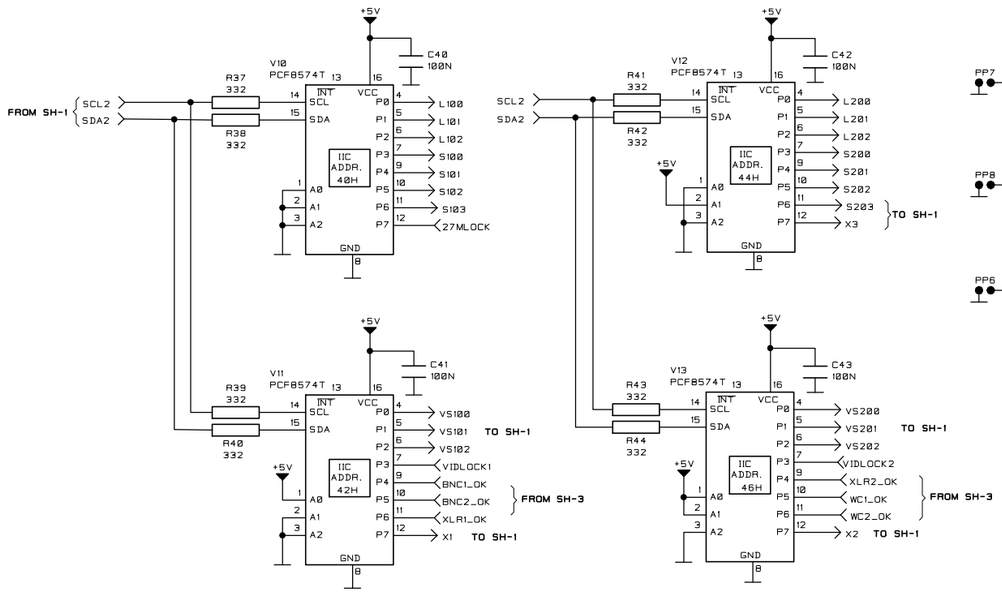

* NOT MOUNTED

* SV5 32K-PIN SOCKETS
SV7 32K-PIN SOCKETS
SV6 32K-PIN SOCKETS
* SV8 32K-PIN SOCKETS
V9F1
V9F2

FIRST USED IN : PT8635

PCB REF.: 4008 117 0670

		DUAL AES/EBU AUDIO GENERATOR	4008 109 8490	1	~~98-04-24~~
				1	~~98-06-10~~
				2	98-06-30
CHECK:		NAME: PF/JML	SCALE 1:1	4 SH	SH 130- 2
KU				DAT. 98-03-02	A3

BNC LEVEL DETECT

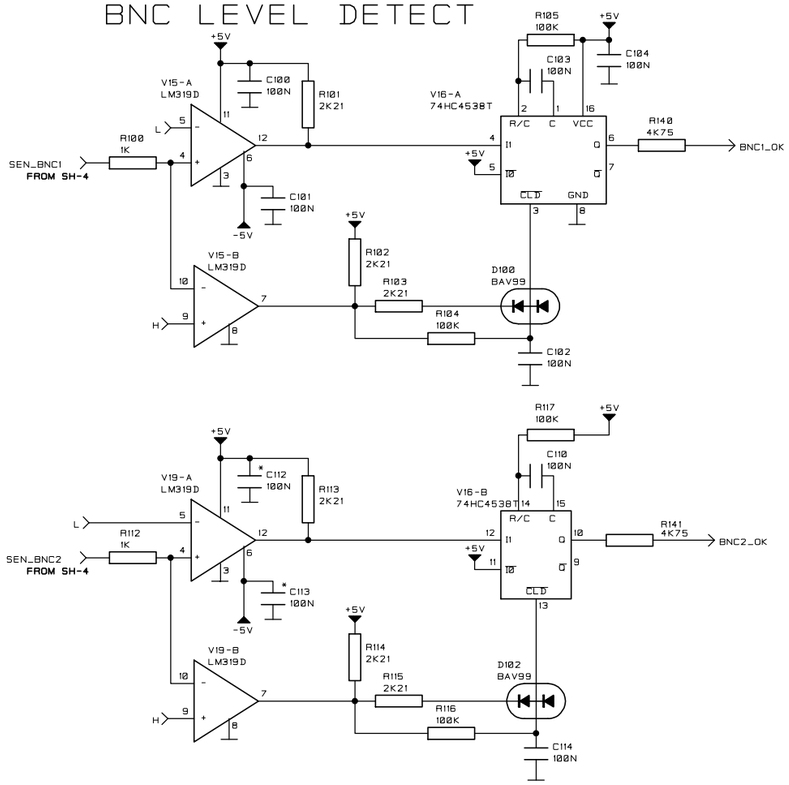

WCLK LEVEL DETECT

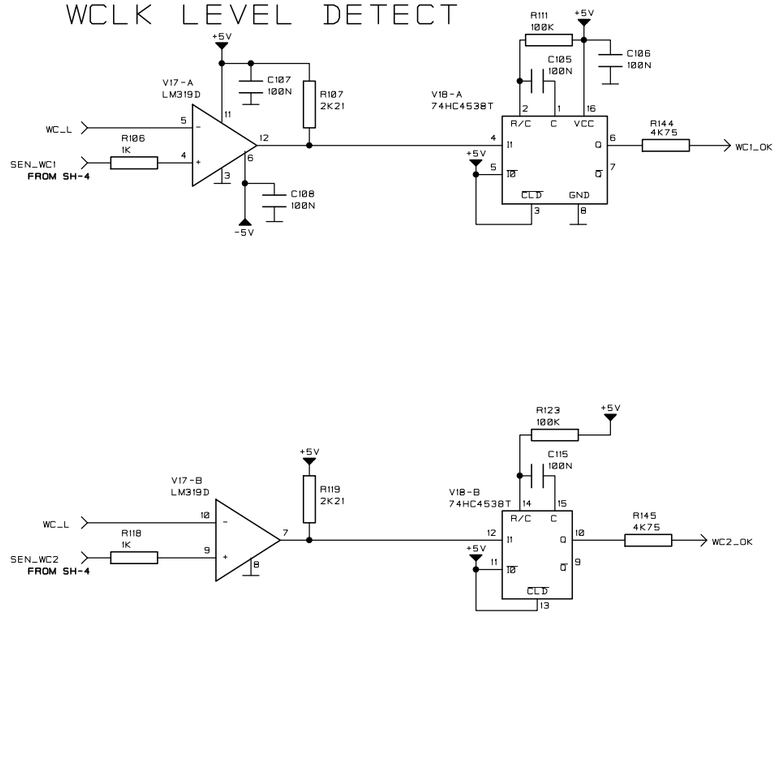

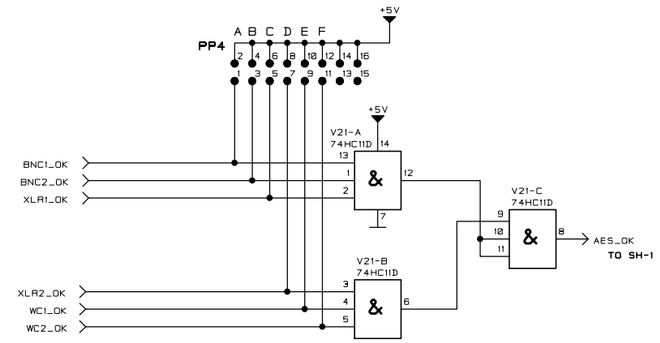

XLR LEVEL DETECT

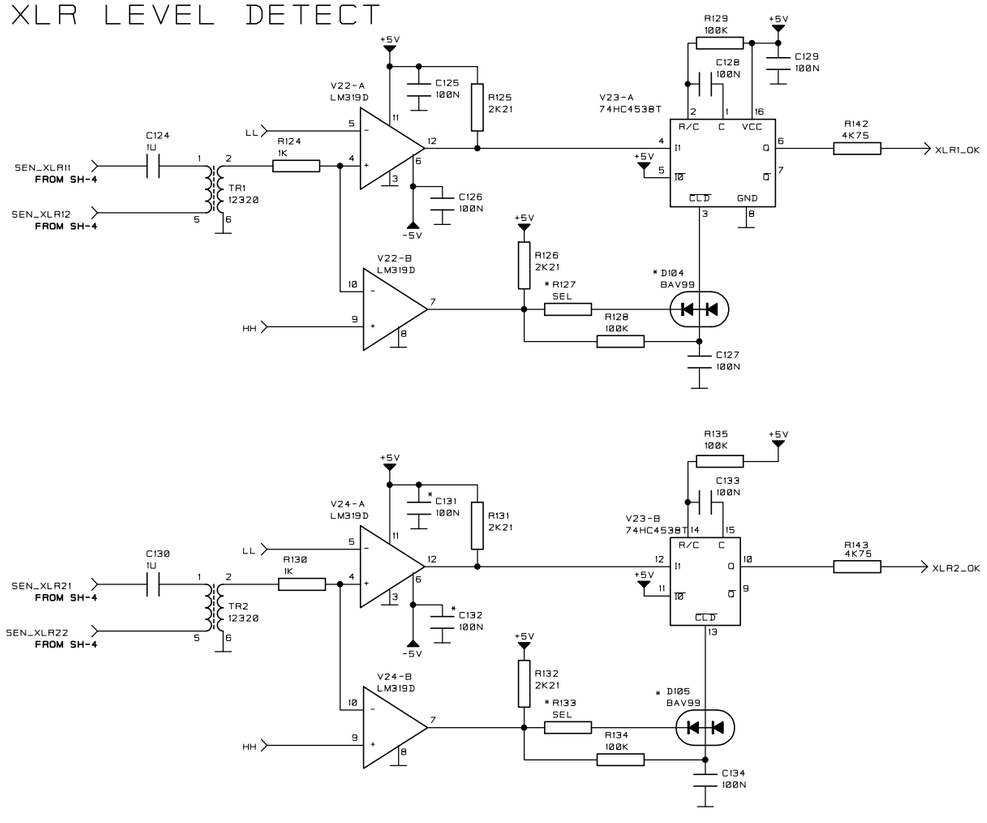

BNC REF

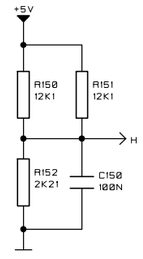

XLR REF

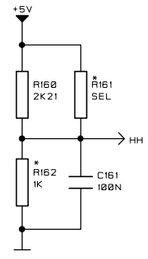

WCLK REF

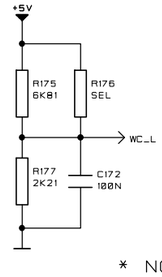

* NOT MOUNTED

FIRST USED IN : PT8635

PCB REF.: 4008 117 0670

		DUAL AES/EBU AUDIO GENERATOR	4008 109 8490			1	~~98-04-24~~
						1	~~98-06-10~~
						2	98-06-30
CHECK:		NAME: PF/JML	SCALE 1:1	4 SH	SH 130-3		
KU					DAT. 98-03-02		A3

XLR OUTPUT

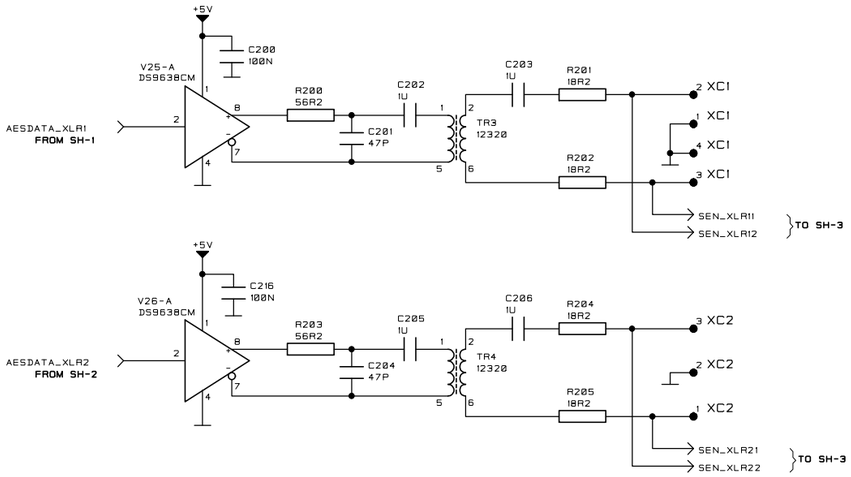

BNC OUTPUT

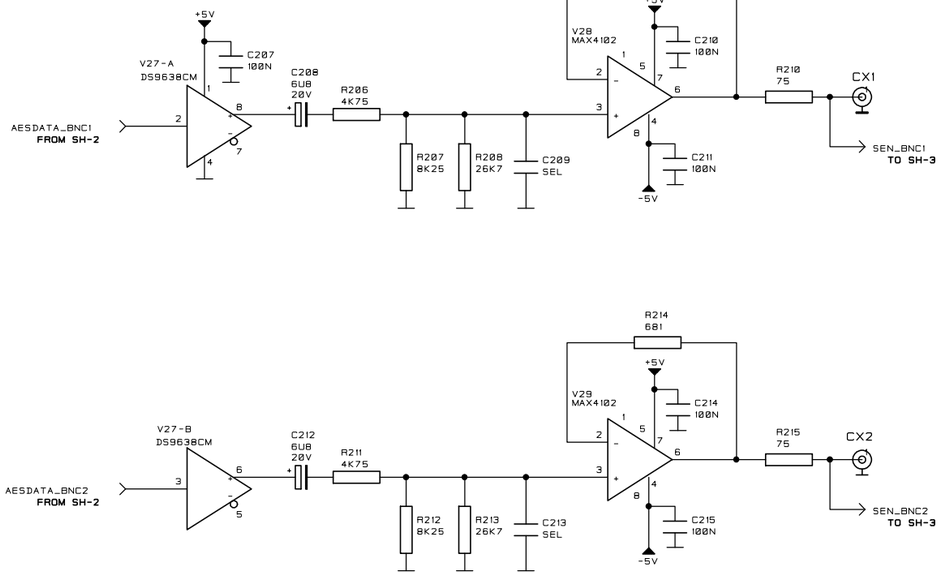

WCLK OUTPUT

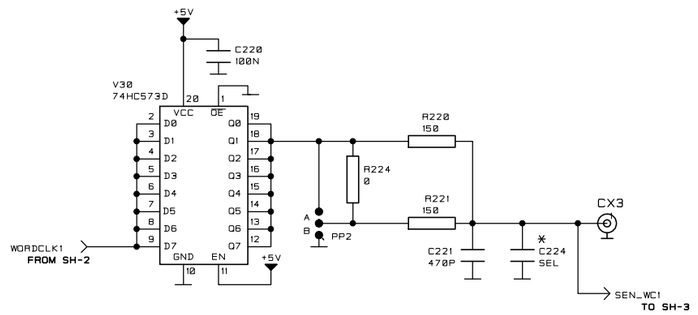

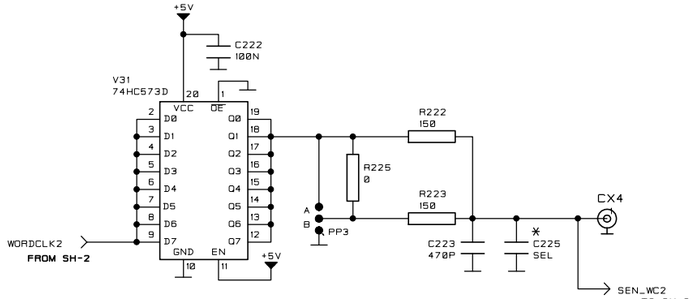

V26-B DS9638CM

V25-B DS9638CM

* NOT MOUNTED

FIRST USED IN : PT8635

PCB REF.: 4008 117 0670

		DUAL AES/EBU AUDIO GENERATOR	4008 109 8490	1	~~98-04-24~~
				1	~~98-06-10~~
				2	98-06-30
CHECK:		NAME: PF/JML	SCALE 1:1 4 SH SH 130-4		
KU			DAT. 98-03-02	A3	