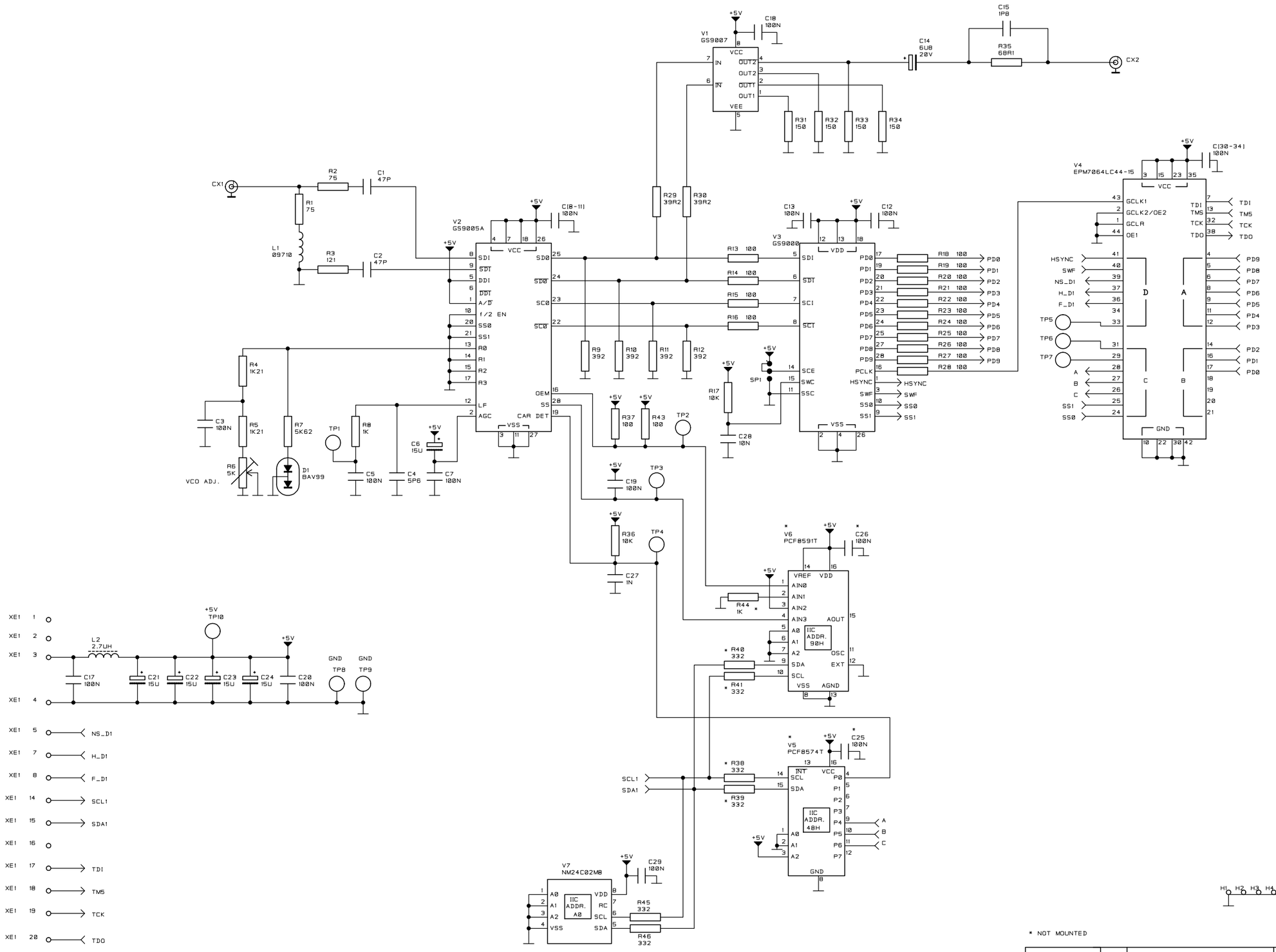

* NOT MOUNTED

FIRST USED IN: PT5210
PCB REF.: 4008 117 0628

		D1 GENLOCK INPUT	4008 109 8292	1	~~96-06-25~~
				2	97-01-23
CHECK:		NAME: PF/SMa	1 SH	SH 130 - 1	
A82922 .SCM A06282 .PCB	KU	PHILIPS TV TEST EQUIPMENT DK-2605 BRØNDBY	DAT. 96-06-12	A3L	