DIMENSIONS WITHOUT TOLERANCES	
One decimal (.0)	±0.30
Two decimals (.00)	±0.10

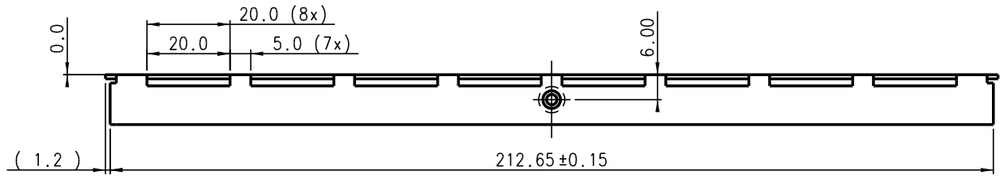

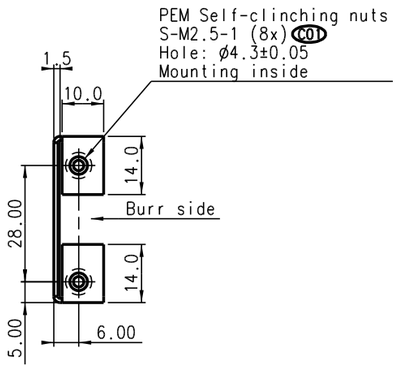

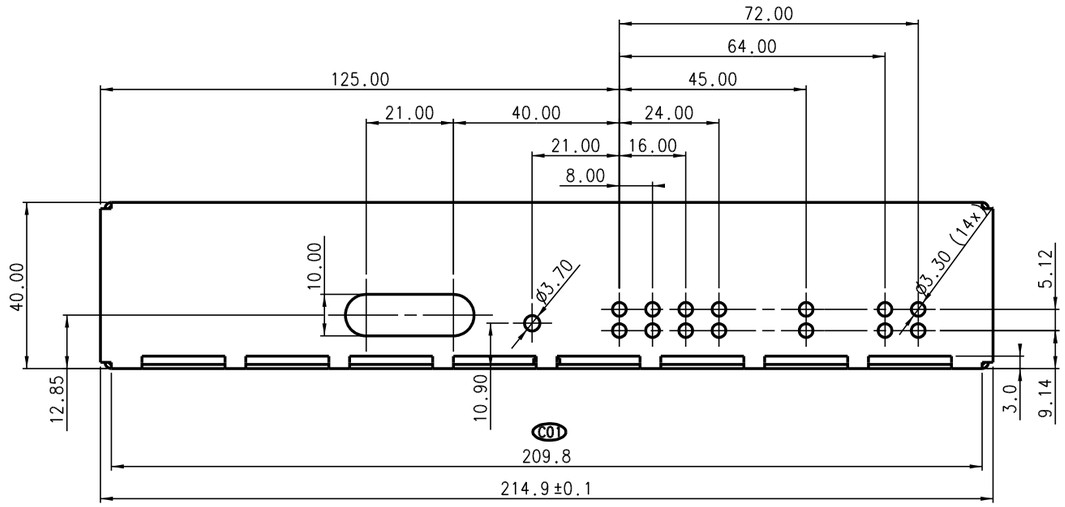

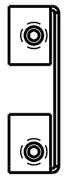

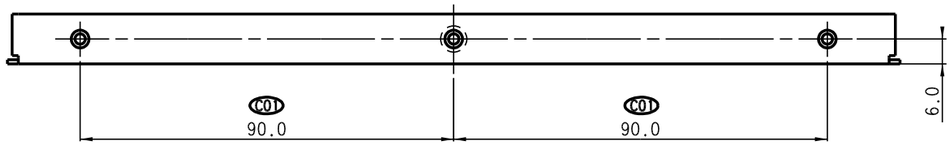

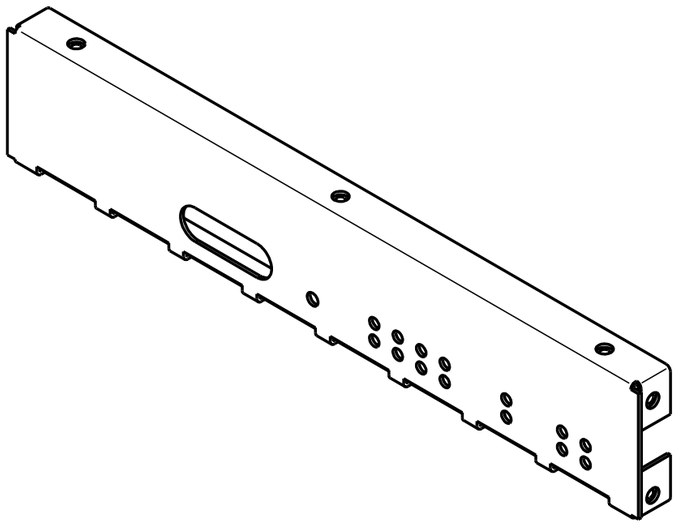

Bending radius: 0.5

C01	090902	PET	C01	See the marked.
C00	200901	PET	C00	
ISSUE	DATE	SIGN.	UNFOL.	

GPV Koncernen

GPV International A/S

RELEASED DATE SIGN.

MATERIAL: According to partlist

SURFACE TREATMENT: According to partlist

COSTOMER ITEM NO.: 4008 107 60020

CUSTOMER/NO.: 743 DK Audio A/S

ITEM DESCRIPTION: Frontpanel LT428

GPV ITEM NO.: 743-13016493 C01

PROJECT NO.: 11016490

DESCRIPTION
THIS DRAWING REMAINS THE EXCLUSIVE PROPERTY OF GPV KONCERNEN. IT SHALL NOT BE COPIED, REPRODUCED, DISCUSSED IN PART OR IN WHOLE, OR OTHERWISE MADE AVAILABLE TO THIRD PARTY WITHOUT OUR PREVIOUS WRITTEN CONSENT.

	DATE	SIGN.
DRAWN BY	20-09-01	PET
DESIGNED BY	20-09-01	PET
CHECKED QC		
UPDATED IN PRODD!		

PAGE 1 OF 1

CAD DRAWING DO NOT CHANGE MANUALLY

SCALE: 1 : 1

A2