DIMENSIONS WITHOUT TOLERANCES	
One decimal (.0)	± 0.30
Two decimals (.00)	± 0.15

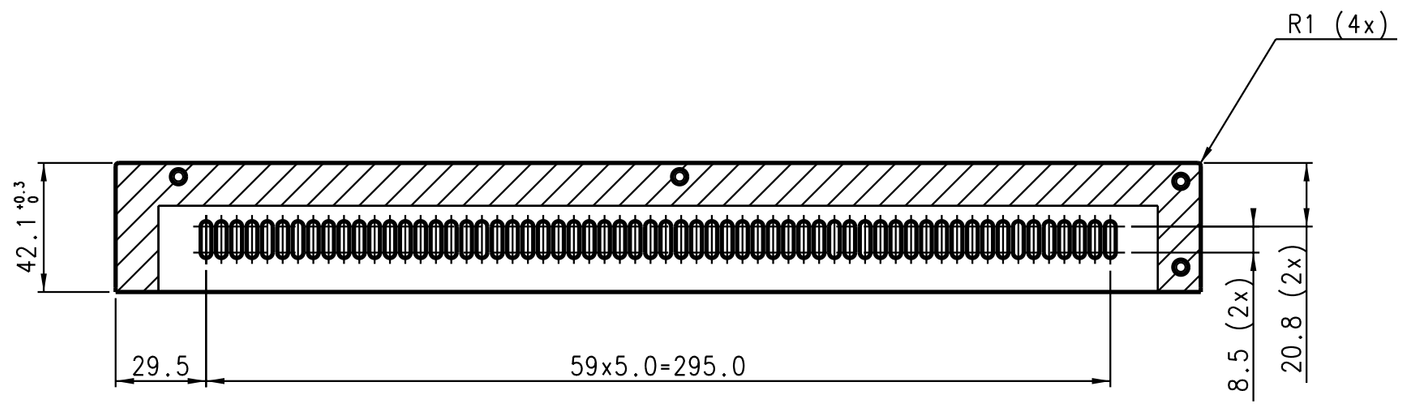

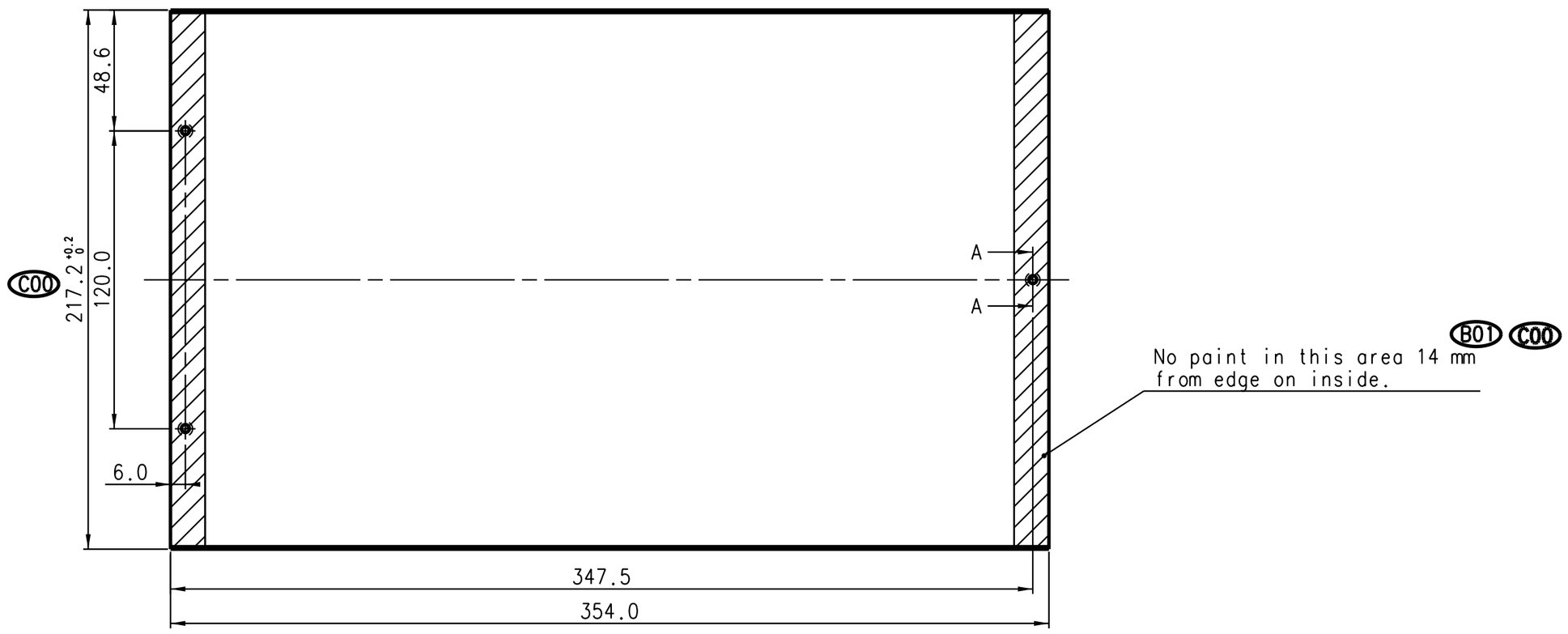

Detail B
Scale 2:1

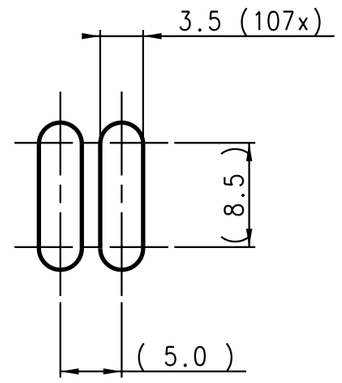

Section A-A
Scale 2:1 C00
(11 holes)

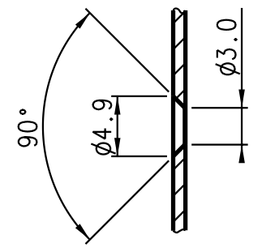

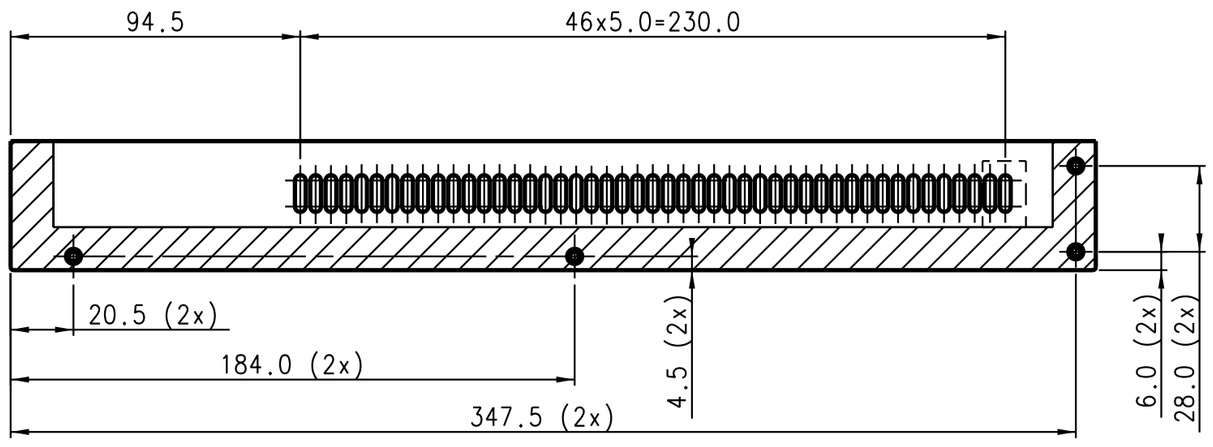

Bending radius: 0.5 mm

ISSUE	DATE	SIGN.	UNFOL.	
C00	190601	PET	---	Changing: countersunk on holes ø5.9->ø4.9, cover for paint, tolerance.
B01	140201	PET	---	Changing data for Surface Treatment
B00	011200	CAH	---	

GPV Koncernen
GPV International A/S

RELEASED
DATE SIGN.

MATERIAL: Al 2S 1/2H 1.0 mm

SURFACE TREATMENT: B01 According to "Standard specification for painting 4008 140 0000"

COSTOMER ITEM NO.: 4008-107-59382

CUSTOMER/NO.: 612 PTV Technologies A/S

ITEM DESCRIPTION: Cover PT5201

GPV ITEM NO.: 612-13016202 C00

PROJECT NO.: 11016200

DESCRIPTION
THIS DRAWING REMAINS THE EXCLUSIVE PROPERTY OF GPV KONCERNEN. IT SHALL NOT BE COPIED, REPRODUCED, DISCUSSED IN PART OR IN WHOLE, OR OTHERWISE MADE AVAILABLE TO THIRD PARTY WITHOUT OUR PREVIOUS WRITTEN CONSENT.

	DATE	SIGN.
DRAWN BY	01-12-00	CAH
DESIGNED BY	01-12-00	CAH
CHECKED QC		
UPDATED IN PRODDI		

PAGE 1 OF 1 — CAD DRAWING DO NOT CHANGE MANUALLY

SCALE: 1 : 2 — A2