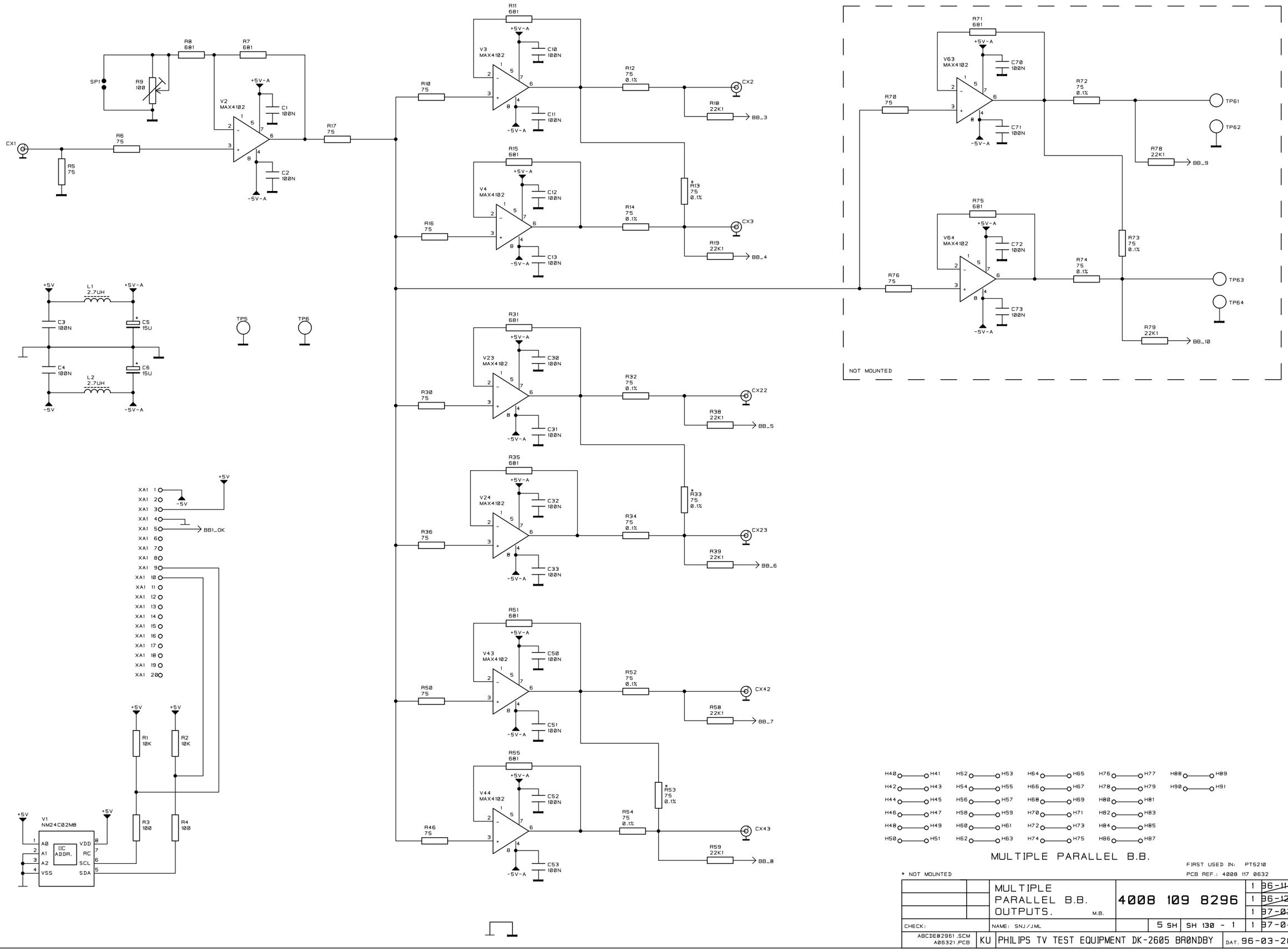

MULTIPLE PARALLEL B.B.

* NOT MOUNTED

FIRST USED IN: PT5210
PCB REF.: 4008 117 0632

		MULTIPLE PARALLEL B.B. OUTPUTS. M.B.	4008 109 8296	1	~~96-11-28~~
				1	~~96-12-10~~
				1	~~97-02-18~~
CHECK:		NAME: SNJ/JML	5 SH SH 130 - 1	1	97-04-11
ABCDE82961.SCM A06321.PCB	KU	PHILIPS TV TEST EQUIPMENT DK-2605 BRØNDBY	DAT. 96-03-28	A3L	