PROPERTY OF PHILIPS ELECTRONIC INDUSTRIES A/S
ALL RIGHTS STRICTLY RESERVED.

FIELD AND MODE CONTROL G/M SYNCHRONISING BCD DECODER COUNTER BINARY COMPARATOR

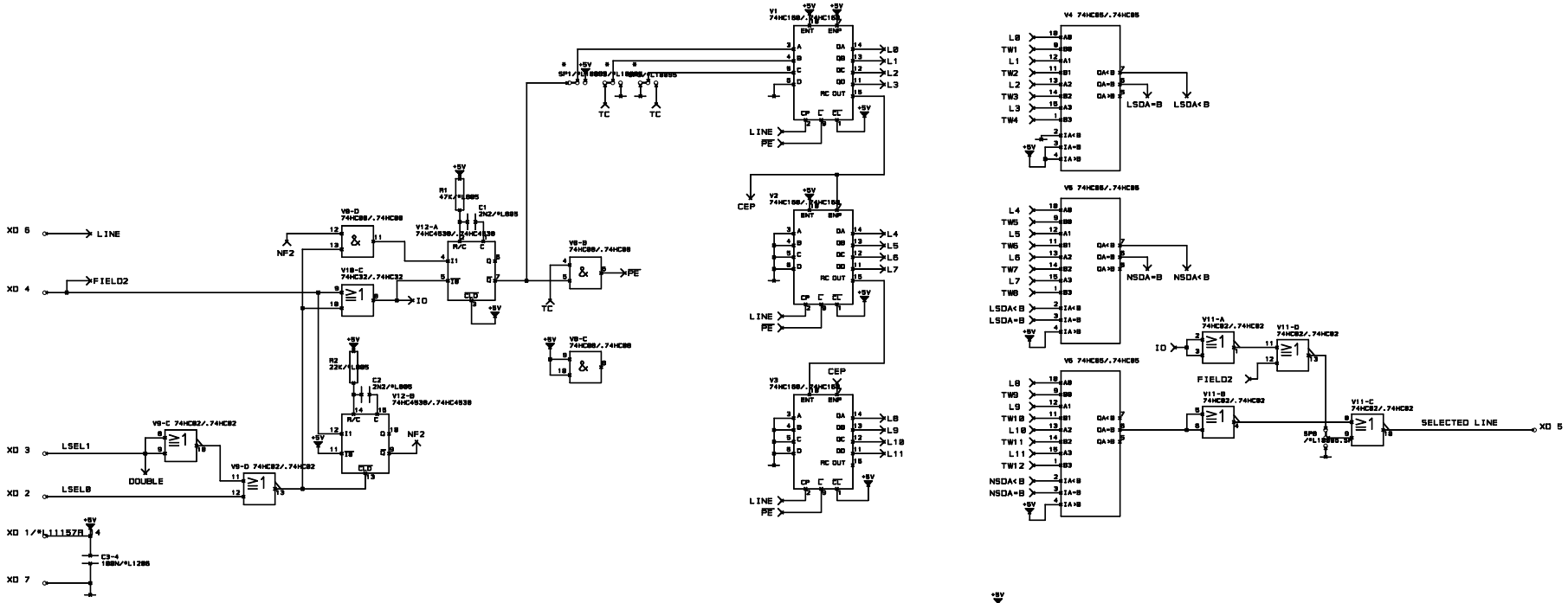

LINE SYSTEM SELECTOR

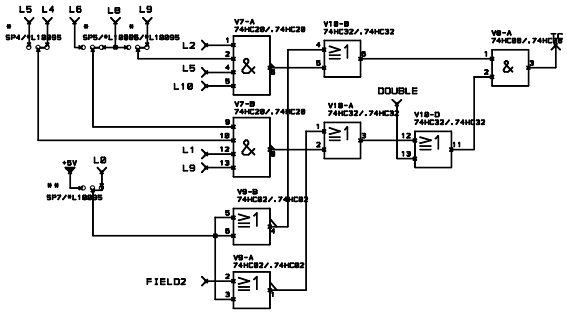

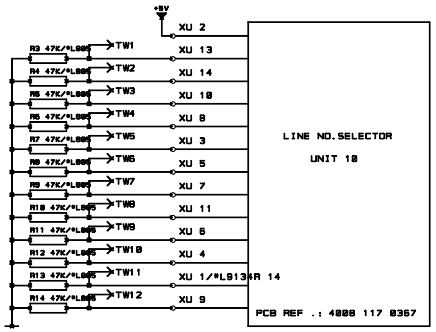

* SHOWN IN G VERSION. OTER CONNECTION FOR M-VERSION
** SHOWN IN 625-525 LINES
OTHER CONNECTION FOR 624 AND 524 LINES

FIRST USED IN : PM5661/A6.1
PCB REF.: 4008 117 0366

AX SCM 97611 SCM A PCB 93661 PCB	LINE COUNTER	4008 108 9761	1	87-02-05
NAME SML/SM /ML/SM		2 SH SH - 138 - 2		
KF	PTV LAB PEI BOX1818 DK-2300 COPENHAGEN S	DAT 86-01-23		A3L