DIMENSIONS WITHOUT TOLERANCES	
One decimal (.0)	±0.30
Two decimals (.00)	±0.10

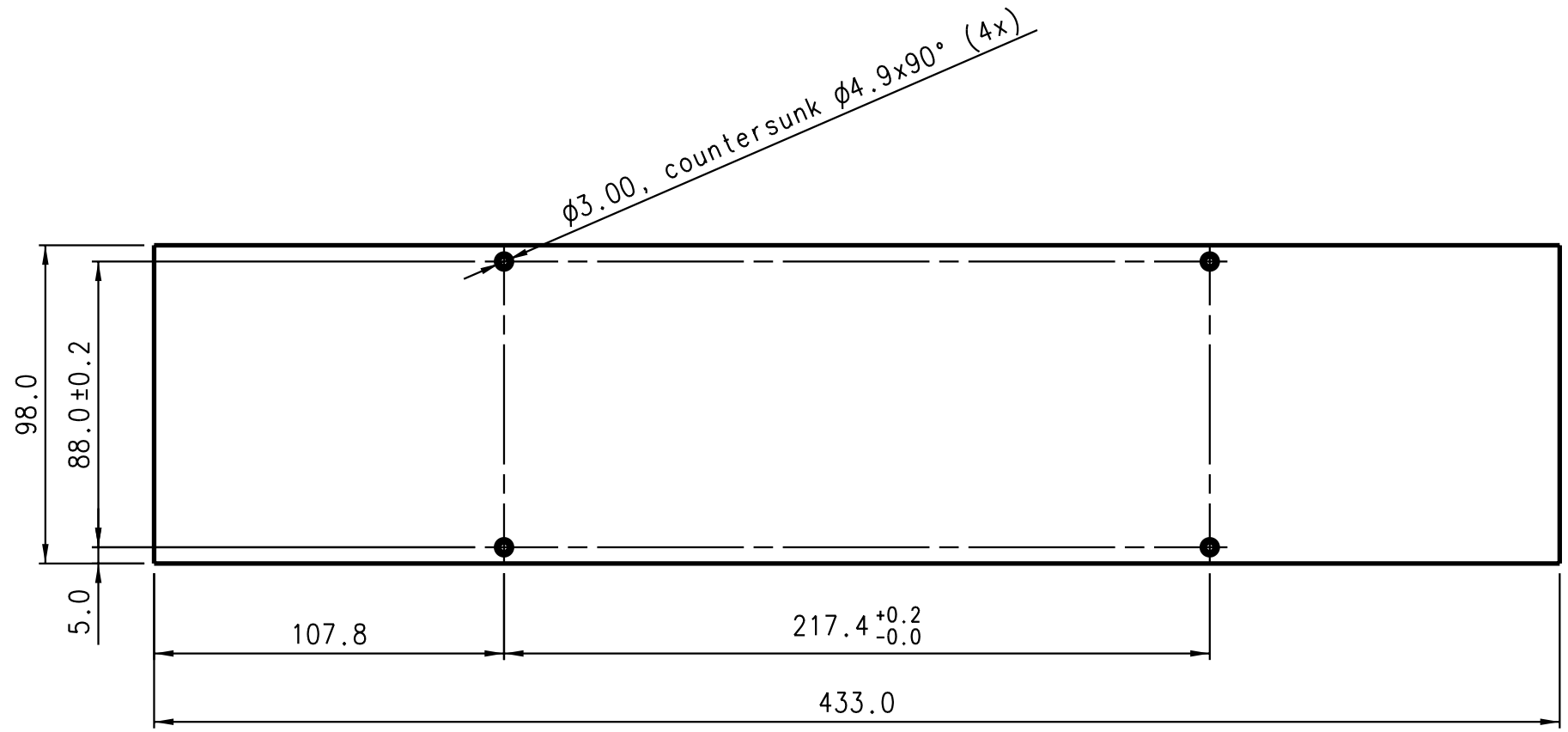

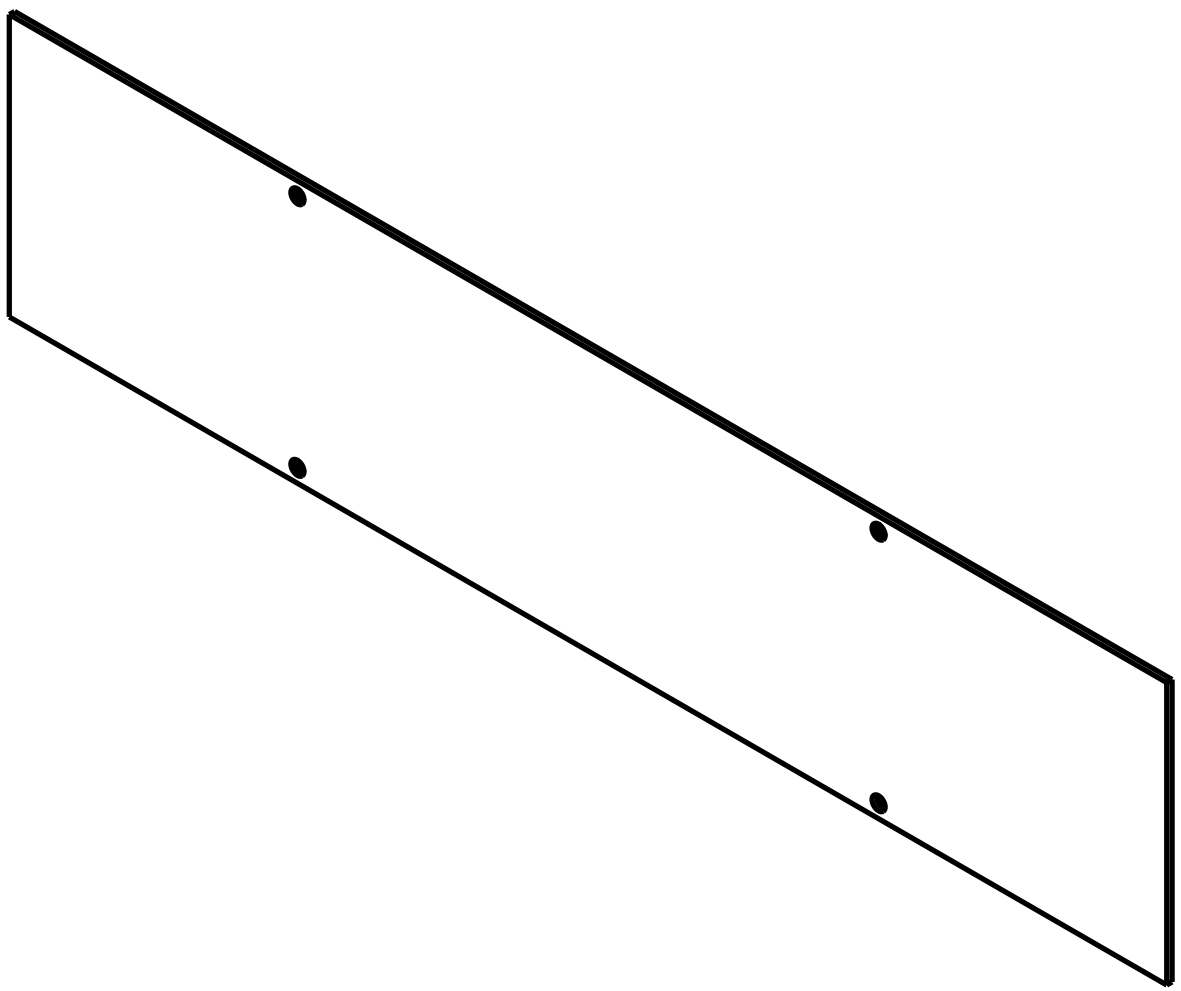

ISSUE	DATE	SIGN.	UNFOL.
C00	190601	PET	C00

GPV Koncernen

GPV International A/S

RELEASED
DATE SIGN.

MATERIAL: AlMg3 G22 2.0 mm

SURFACE TREATMENT: Aludine 1500

COSTOMER ITEM NO.: 4008 107 59440

CUSTOMER/NO.: 612 PTV Technologies A/S

ITEM DESCRIPTION: Bottom Plate PT5201

GPV ITEM NO.: 612-13016937 C00

PROJECT NO.: 11016200

DESCRIPTION

THIS DRAWING REMAINS THE EXCLUSIVE PROPERTY OF GPV KONCERNEN. IT SHALL NOT BE COPIED, REPRODUCED, DISCUSSED IN PART OR IN WHOLE, OR OTHERWISE MADE AVAILABLE TO THIRD PARTY WITHOUT OUR PREVIOUS WRITTEN CONSENT.

	DATE	SIGN.
DRAWN BY	31-05-01	PET
DESIGNED BY	31-05-01	PET
CHECKED QC		
UPDATED IN PRODDI		

PAGE 1 OF 1

CAD DRAWING DO NOT CHANGE MANUALLY

SCALE: 1 : 2

A3