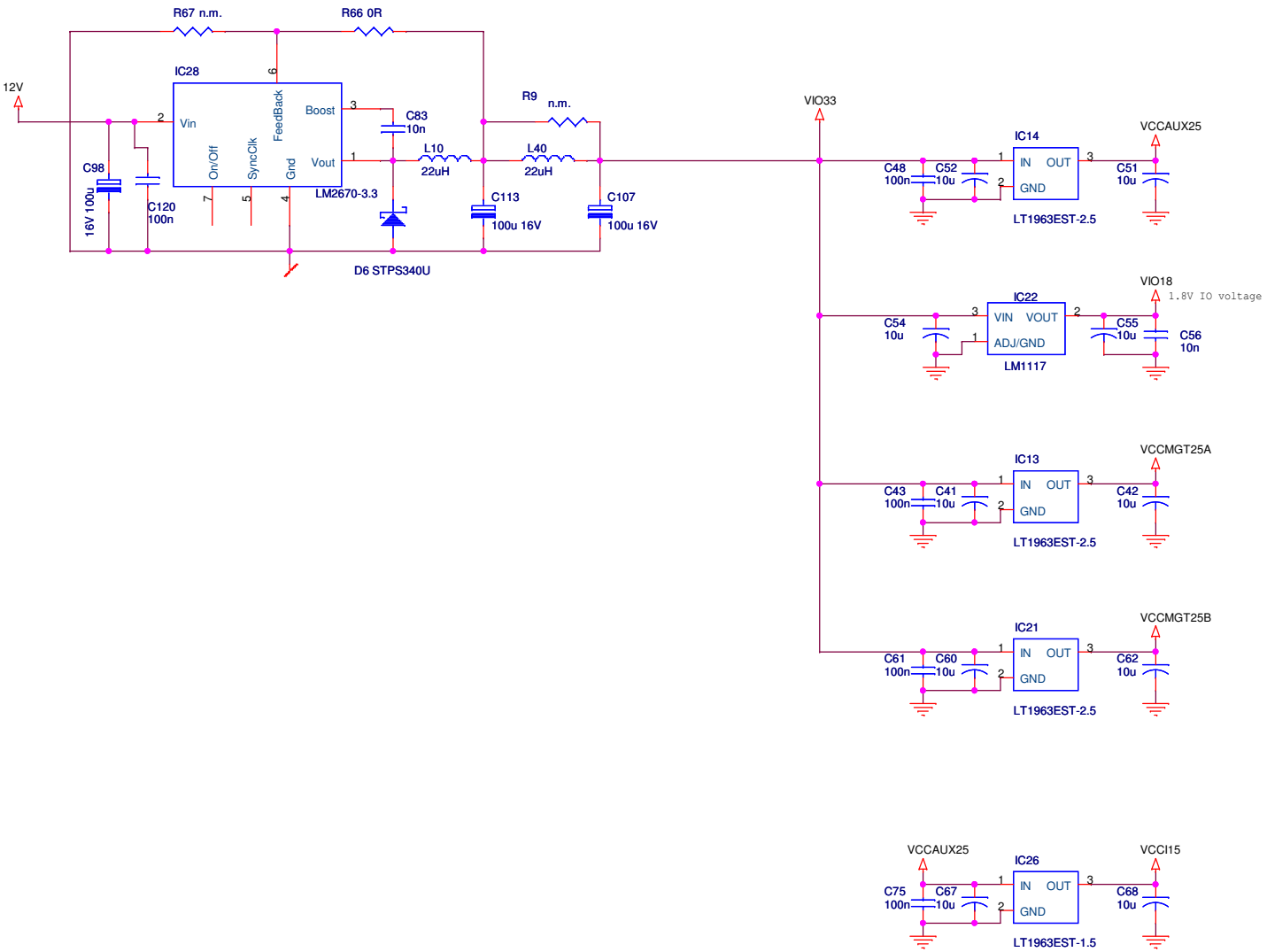

Title	POWER TIL 8612	
Size B	Document Number DK-Technologies A/S PT8612 Test Pattern Generator	Rev 1.6
Date: Monday, August 27, 2007	Sheet 4 of 5	