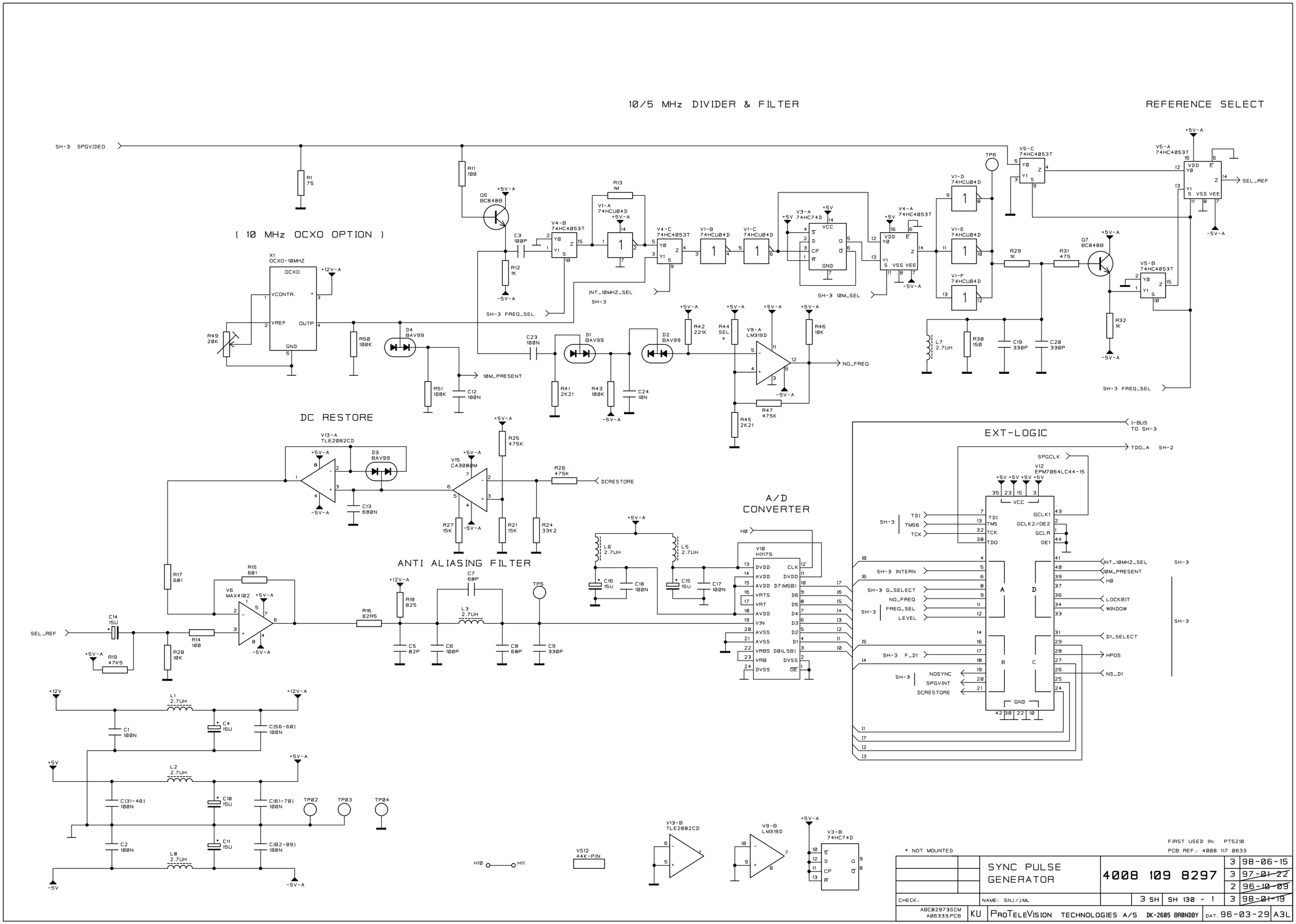
10/5 MHz DIVIDER & FILTER
REFERENCE SELECT
(10 MHz OCXO OPTION)
DC RESTORE
ANTI ALIASING FILTER
A/D CONVERTER
EXT-LOGIC
SH-3 SPGVIDEO
SEL_REF
INT_10MHZ_SEL
SH-3 FREQ_SEL
SH-3 10M_SEL
10M_PRESENT
NO_FREQ
DCRESTORE
TDO_A SH-2
I-BUS TO SH-3
* NOT MOUNTED
SYNC PULSE GENERATOR
4008 109 8297
FIRST USED IN: PT5210
PCB REF.: 4008 117 0633
3 98-06-15
3 97-01-22
2 96-10-09
3 98-01-19
CHECK:
NAME: SNJ/JML
3 SH SH 130 - 1
ABC82973SCM A06333.PCB
KU
PROTELEVISION TECHNOLOGIES A/S DK-2605 BRØNDBY
DAT. 96-03-29
A3L