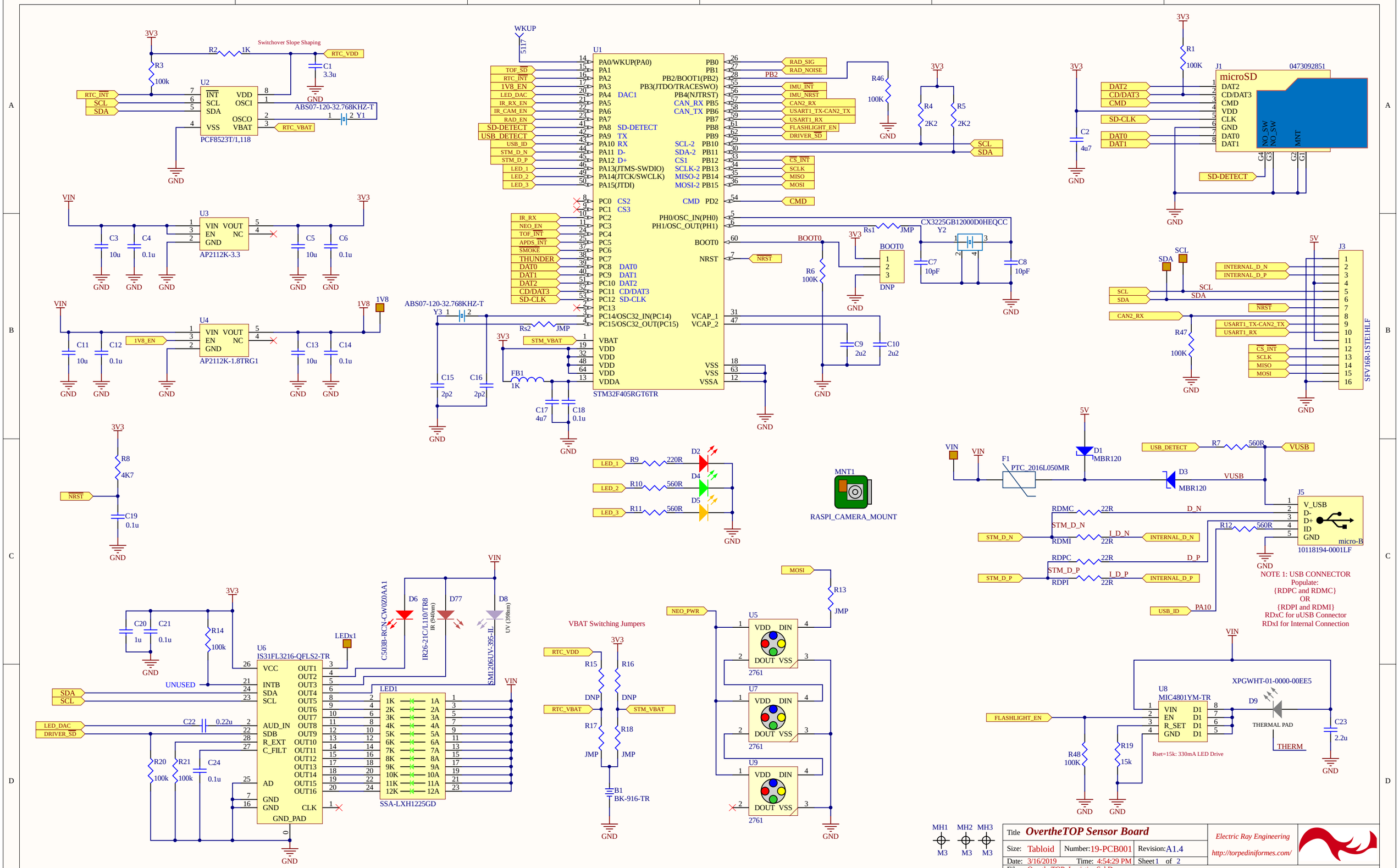
U1
STM32F405RGT6TR
U2
PCF8523T/1,118
U3
AP2112K-3.3
U4
AP2112K-1.8TRG1
U6
IS31FL3216-QFLS2-TR
LED1
SSA-LXH1225GD
U5
U7
U9
2761
J1
microSD
0473092851
J3
SFV16R-1STE1HLF
J5
V_USB
micro-B
10118194-0001LF
NOTE 1: USB CONNECTOR
Populate:
{RDPC and RDMC}
OR
{RDPI and RDMI}
RDxC for uUSB Connector
RDxI for Internal Connection
U8
MIC4801YM-TR
XPGWHT-01-0000-00EE5
Rset=15k: 330mA LED Drive
VBAT Switching Jumpers
B1
BK-916-TR
MNT1
RASPI_CAMERA_MOUNT
F1
PTC_2016L050MR
D1
MBR120
D3
MBR120
Y1
ABS07-120-32.768KHZ-T
Y2
CX3225GB12000D0HEQCC
Y3
ABS07-120-32.768KHZ-T
Switchover Slope Shaping
MH1 MH2 MH3
M3 M3 M3
Title OvertheTOP Sensor Board
Size: Tabloid
Number: 19-PCB001
Revision: A1.4
Date: 3/16/2019
Time: 4:54:29 PM
Sheet 1 of 2
File: OvertheTOP_Logistics.SchDoc
Electric Ray Engineering
http://torpediniformes.com/

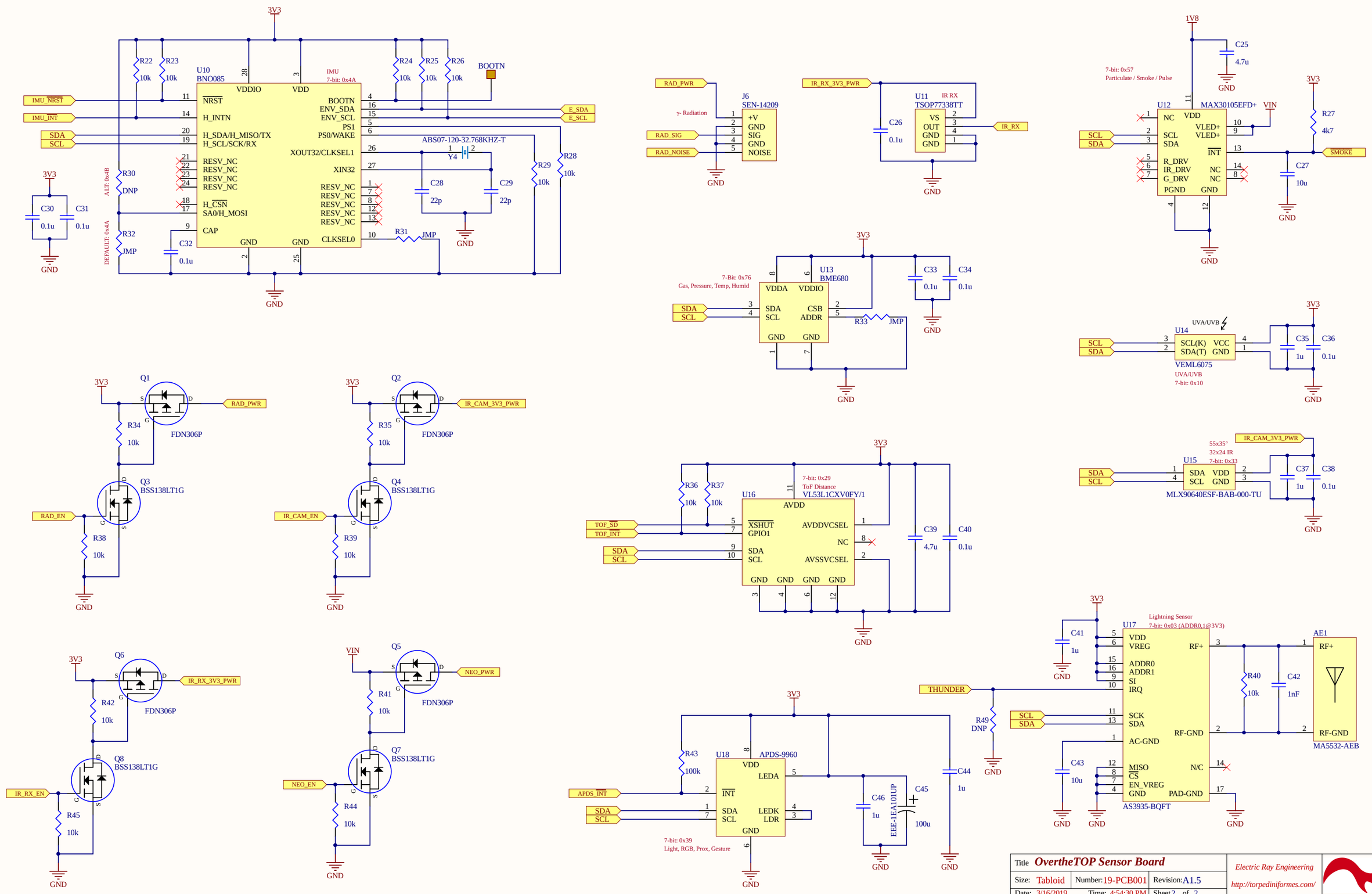

Title	*OvertheTOP Sensor Board*
Size: Tabloid	Number: 19-PCB001 Revision: A1.5
Date: 3/16/2019	Time: 4:54:30 PM Sheet 2 of 2
File: OvertheTOP_Sensors.SchDoc	

Electric Ray Engineering

http://torpediniformes.com/

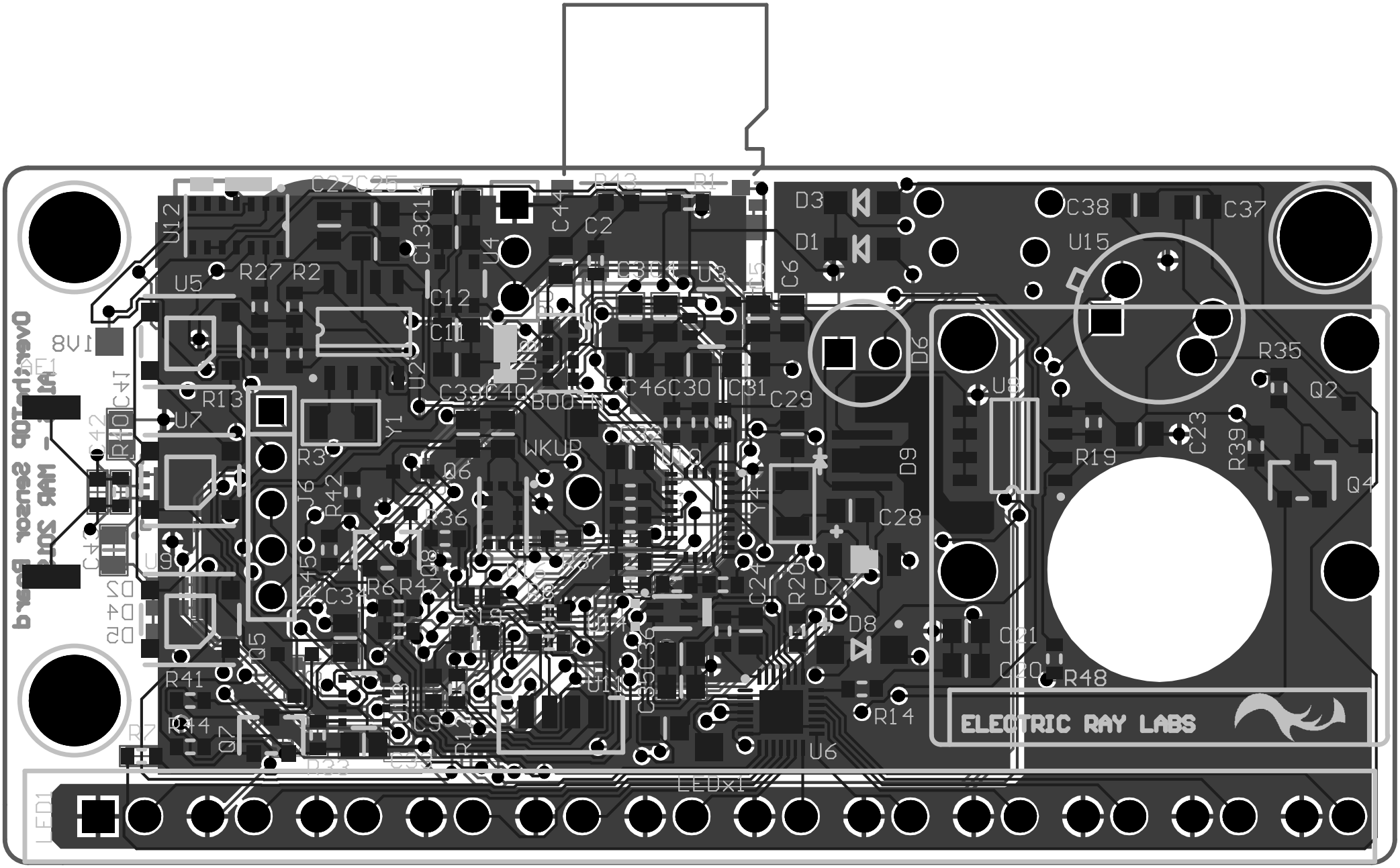
ELECTRIC RAY LABS
BOOT
WKUP
LEDx1
LED1
C27 C25
R43
R1
D3
D1
C38
C37
U15
U12
U5
R27 R2
C13 C11
C12
C44
C2
U4
U3
C6
D6
R35
Q2
U8
R19
C23
R39
Q4
D9
C28
D7
D8
C21
C40
R48
R14
U6
R13
U7
Y1
R3
J6
R42
Q6
R36
U9
R45
C31
R6 R47
C24
R20
Q5
R41
R44
Q7
R7
C9
D33
C46 C30
C31
C29
C39 C40
Y4
U2
U11
U10
U1
C36
C35
C34
C42
R10
C41
D2
D4
D5
1V8
DF1
0v0 Sensor board
MAR 2018

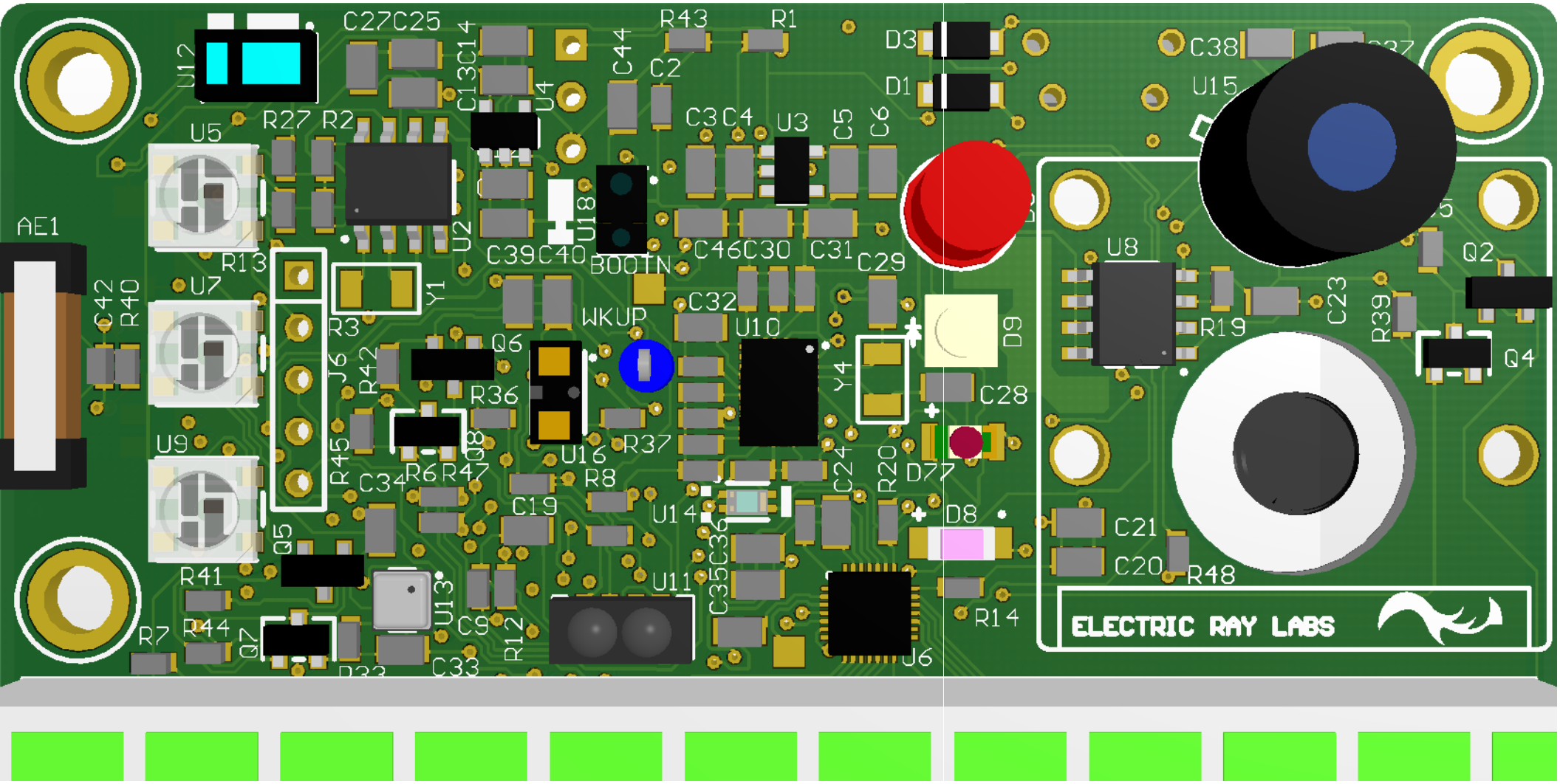
C27C25
R43
R1
D3
D1
C38
U12
C13C14
C44
C2
U4
U15
R27
R2
C3C4
U3
C5
C6
U5
AE1
U18
U2
C39C40
BOOTN
C46C30
C31
C29
U8
Q2
R13
U7
C42
R40
Y1
R3
WKUP
C32
U10
D9
R19
C23
R39
Q4
J6
R42
Q6
R36
Y4
C28
U9
R45
Q8
U16
R37
R6
R47
C34
R8
C24
R20
D77
C19
U14
D8
C21
Q5
C36
C20
R48
R41
U13
U11
C35
R14
R7
R44
Q7
C9
R12
J6
D33
C33
ELECTRIC RAY LABS

Designator	Description	Footprint	Quantity	Manufacturer	Manufacturer Part Number	Supplier 1	Supplier Part Number 1	Value
1V8, BOOTN, LEDx1, SCL, SDA, VIN	Testpoint Solderable 1.5mm Square	TP_1.5mm_Square_Bare	6					
AE1	RFID Transponders	MA5532	1	Coilcraft	MA5532-AEB			
B1	BATTERY RETAINER COIN 12MM SMD	BK-916-TR	1	MPD (Memory Protection Devices)	BK-916-TR			
BOOT0	Header, 3-Pin	HDR1X3	1					DNP
C1	Capacitor	6-0805_L	1					3.3u
C2, C17	Capacitor (Semiconductor SIM Model)	1608[0603]	2			Digi-Key	490-14638-1-ND	4u7
C3, C5, C11, C13, C27, C43	Capacitor	6-0805_L	6					10u
C4, C6, C12, C14, C21, C24, C26, C30, C31, C32, C33, C34, C36, C38, C40	Capacitor	6-0805_L	15					0.1u
C7, C8	Capacitor (Semiconductor SIM Model)	1608[0603]	2			Digi-Key	490-3570-1-ND	10pF
C9, C10	Capacitor (Semiconductor SIM Model)	1608[0603]	2			Digi-Key	445-13221-1-ND	2u2
C15, C16	Capacitor (Semiconductor SIM Model)	1608[0603]	2			Digi-Key	490-11271-1-ND	2p2
C18, C19	Capacitor (Semiconductor SIM Model)	1608[0603]	2			Digi-Key	490-4774-1-ND	0.1u
C20, C35, C37, C41, C44, C46	Capacitor	6-0805_L	6					1u
C22	Capacitor	6-0805_L	1					0.22u
C23	Capacitor	6-0805_L	1					2.2u
C25, C39	Capacitor	6-0805_L	2					4.7u
C28, C29	Capacitor	6-0805_L	2					22p
C42	Capacitor	1608[0603]	1					1nF
C45	CAP ALUM 100UF 20% 25V SMD	CAP_SIZE_E_PANA	1	Panasonic Electronic Components	EEE-1EA101UP			100u
D1, D3	DIODE SCHOTTKY 20V 1A SOD123FL	SOD-123FL	2	ON Semiconductor	MBR120	Digi-Key	MBR120VLSFT3GOSCT-ND	
D2	Generic LED, SMD, RED	IN-S83AT_RED	1			Digi-Key	1830-1065-1-ND	
D4	Generic LED, 0603, GREEN	IN-S83AT_GRN	1			Digi-Key	1830-1062-1-ND	
D5	Generic LED, 0603, ORANGE	LO Q976	1			Digi-Key	475-2486-1-ND	
D6	LED RED CLEAR 5MM ROUND T/H	CS038-RCN	1	Cree Inc.	CS038-RCN-CW0Z0AA1			
D8	EMITTER UV 368NM 25MA 1206	SM1206UV-395-IL	1	Bivar Inc.	SM1206UV-395-IL			
D9	LED XLAMP NEUTRAL WHT 4000K 25MD	XP-G_LED	1	Cree Inc.	XPGWHT-01-0000-00EE5			
D77	EMITTER IR 940NM 65MA 1206	IR26-21C/L110/TR8	1	Everlight Electronics Co Ltd	IR26-21C/L110/TR8			
F1	600mA PTC	PolyFuse_2016L	1	Littelfuse Inc.	2016L050MR	Digi-Key	F4070CT-ND	
FB1	Inductor	J1-0603	1			Digi-Key	490-1015-1-ND	1K
J1	CONN MICRO SD CARD PUSH-PULL R/A	0473092851	1	Molex, LLC	0473092851	Digi-Key	WM6701CT-ND	
J3	CONN FFC BOTTOM 16POS 0.50MM R/A	SFV16R-1STE1HLF	1	Amphenol ICC (FCI)	SFV16R-1STE1HLF			
J5	USB uB R/A Board Edge Connector	USB-R/A-10118194-0001LF	1	Amphenol FCI	10118194-0001LF	Digi-Key	609-4618-1-ND	
J8	Pocket Geiger Radiation Sensor - Type 5	SEN-14209	1	Sparkfun	SEN-14209			
LED1	LED ARRAY 2 SXSMM 12-SEG GREEN	SSA-LXH1226GD	1	Lumex Opto/Components Inc.	SSA-LXH1225GD			
MH1, MH2, MH3	A Loose Fitting M3 Mounting Hole	M3_Loose	3					
MNT1	Mounting Hole for RASPI Camera 2.1	RPI-CAM-V2_1	1	Raspberry Pi	RPI-CAM-V2_1			
Q1, Q2, Q5, Q6	P-Channnal -1.8V Specified PowerTrench MOSFET	SuperSOT-3	4	On Semiconductor / Fairchild	FDN306P			
Q3, Q4, Q7, Q8	Power MOSFET, 200mA, 50V, N-Channel, SOT-23	SOT-23	4	On Semiconductor	BSS138LT1G			
R1, R3, R8, R14, R20, R21, R43, R46, R47, R48	Resistor	J1-0603	10			Digi-Key	311-100KLDCT-ND	100K
R2	Resistor	J1-0603	1					1K
R4, R5	Resistor	J1-0603	2			Digi-Key	311-4.70KHRCT-ND	2K2
R7, R10, R11, R12	Resistor	J1-0603	4			Digi-Key	311-560GRCT-ND	560R
R6, R27	Resistor	J1-0603	2			Digi-Key	311-4.70KHRCT-ND	4K7
R9	Resistor	J1-0603	1			Digi-Key	311-220HRCT-ND	220R
R13, R17, R18, R31, R32, R33, Rs1, Rs2	Resistor	J1-0603	8			Digi-Key	311-4.70KHRCT-ND, [NoParam], [NoParam], [NoParam], [NoParam], [NoParam], 311-100KLDCT-ND, 311-100KLDCT-ND	JMP
R15, R16, R30, R49	Resistor	J1-0603	4					DNP
R19	Resistor	J1-0603	1					15k
R22, R23, R24, R25, R26, R28, R29, R34, R35, R36, R37, R38, R39, R40, R41, R42, R44, R45	Resistor	J1-0603	18					10k
RDMC, RDMI, RDPC, RDPI	Resistor	J1-0603	4			Digi-Key	311-22GRCT-ND	22R
U1	ARM Cortex-M4 32-bit MCU+FPU, 1024 KB Flash, 192 KB Internal RAM, 51 I/Os, 64-Pin LQFP, -40 to 85 degC, Tape and Reel	STM-LQFP64_N	1			Digi-Key	497-17432-1-ND	
U2	IC RTC CLK/CALENDAR I2C 8-SOIC	SO8_PCF8523	1	NXP USA Inc.	PCF8523T/1,118			
U3	IC REG LINEAR 3.3V 600MA SOT25	SOT25	1	Diodes Incorporated	AP2112K-3.3			
U4	IC REG LINEAR 1.8V 600MA SOT25	SOT25	1	Diodes Incorporated	AP2112K-1.8TRG1			
U5, U7, U9	ADDRESS LED DISCR SER RGBW NATURAL	5050_SK6812	3	Adafruit Industries LLC	2761			
U6	IC LED DRIVER LIN DIM 20MA 28QFN	QFN28_ISSI	1	ISSI, Integrated Silicon Solution Inc	IS31FL3216-QFLS2-TR			
U8	IC LED DRVR LIN DIM 600MA 8SOIC	SOIC8_MIC4801	1	Microchip Technology	MIC4801YM-TR			
U10	IMU ACCELG/GRO/MAG I2C 32BIT	BNO085	1	Hillcrest Laboratories, Inc.	BNO085			
U11	MOD IR RCVR 38KHZ TOP VIEW	TSOP77338TT	1	Vishay Semiconductor Opto Division	TSOP77338TT			
U12	SENSOR OPTIC AIR QUAL 14-OESIP	OLGA-14_MAX30105	1	Maxim Integrated	MAX30105EFD+			
U13	SENSOR RH PRESSURE TEMP VOC	BME680	1	Bosch Sensortec	BME680			
U14	UVA/UVB SENSOR W/I2C 4-OPLGA	VEML6075	1	Vishay Semiconductor Opto Division	VEML6075			
U15	SENSOR DGTL - 40C-85C TO39	MLX90640	1	Melexis Technologies NV	MLX90640ESF-BAA-000-TU			
U16	OPTICAL LGA12 4.9X2	VLS3L1X	1	STMicroelectronics	VLS3L1CXVGFY1			
U17	IC SENSOR LIGHTNING MLPQ-16	AS3935	1	ams	AS3935-BQFT			
U18	SENSOR AMBIENT/PROX DGTL	APDS-9960	1	Broadcom Limited	APDS-9960			
WKUP	S117K - BLU KEYSTONE TESTPOINT	BLU_TP_KEYSTONE	1	Keystone	S117			
Y1, Y3, Y4	CRYSTAL 32.768KHZ 6PF SMD	XTAL_32x15_BSB	3	Abracon LLC	ABS07-120-32.768KHZ-T			
Y2	CRYSTAL 12.0000MHZ	XTAL32x25_BSB	1	AVX / Kyocera	CX3225GB12000D0	Digi-Key	1253-1166-1-ND	