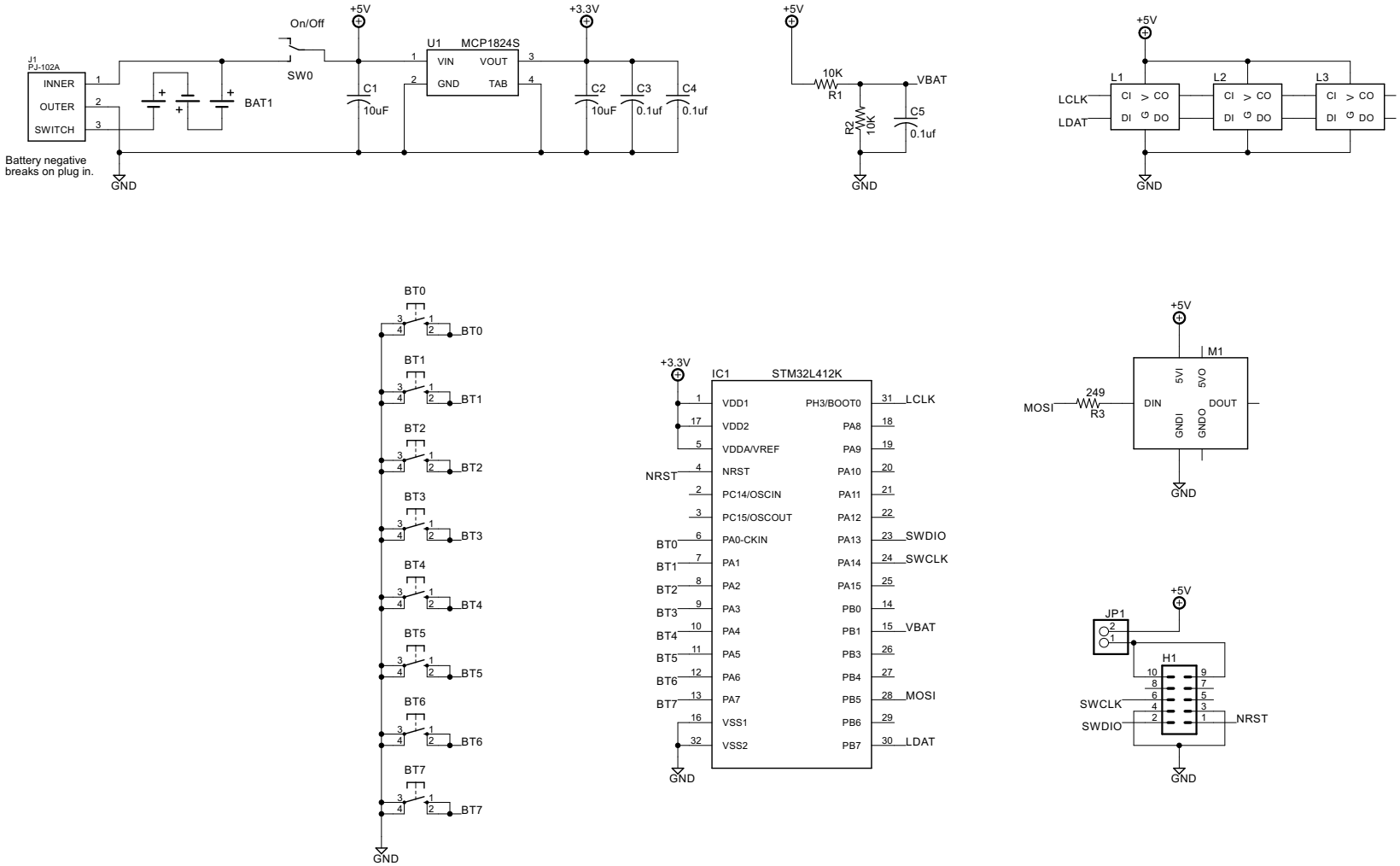

Designed by: Dave Doerr

TITLE: Othello

Document Number:

REV:

Date: 8/30/2024 9:09:32 PM

Sheet: 1/2