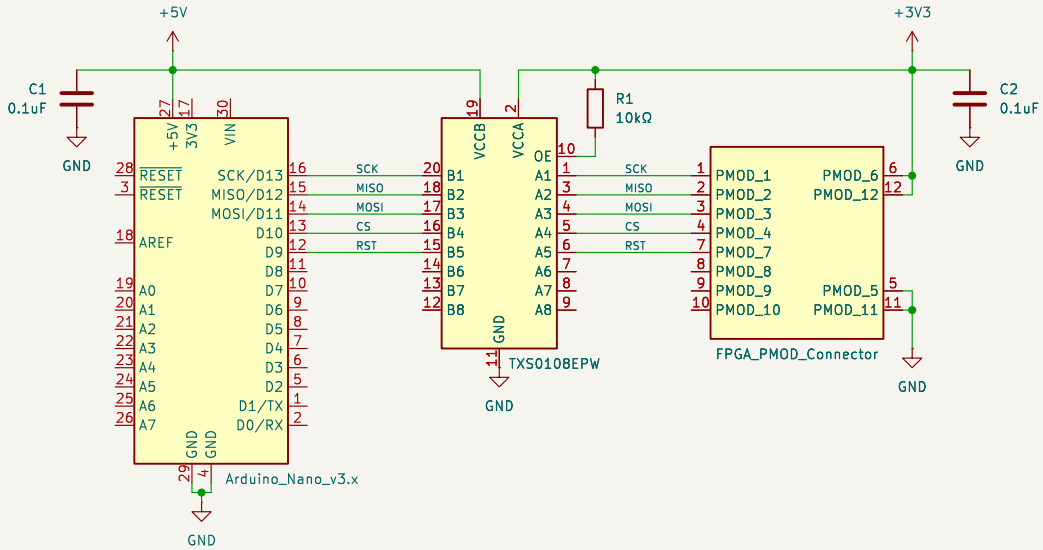

©Loris Guerra – See license file

Sheet: /
File: arduino-fpga.kicad_sch

Title: *Arduino_FPGA_Connection*

Size: A5	Date: 2025-01-12	Rev: 3
KiCad E.D.A. 8.0.7		Id: 1/1