x work louder

Industrial design engineering Concept booklet

group 12

Jonathan Cheung
Josh Reynolds
Zain Ahmad
Krzysztof Wancerski

product opportunity

x

A timer designed to help you ~~be in the zone~~

get, stay, and leave the zone as appropriate.

Young adults commonly experience tendencies to hyperfocus intensely and experience time blindness, or become easily distracted - all of which leading to incomplete tasks. [1]

So, we know that time management is more nuanced than simply needing to focus. It's about balancing all your tasks and hobbies in a day without compromise. And that's why we made TimeLine.

So, we know that time management is more nuanced than simply needing to focus. It's about balancing all your tasks and hobbies in a day without compromise. And that's why we made TimeLine.

Reimagining time as a linear progression

Introducing your new timer: TimeLine's laser module. A laser is mapped along the length of the desk, and is increemently reduced in length according to the timer. Once the timer depletes, so does the laser.

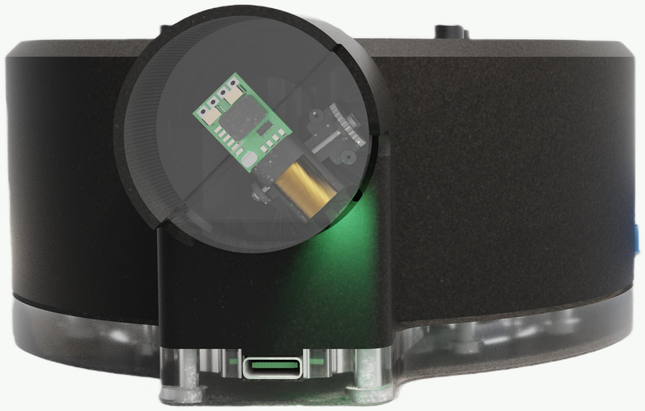

concept development

x w+rk l◆ud◢r

▾ ***Alongside a normal timer, timeline has a second mode:***

▸ Introducing, **pr+gr◢ssiv◢ p◆m◆**

DEVELOPER INSIGHT

Reinventing the Pomodoro® Technique. Our research uncovered some flaws in the traditional Pomodoro® approach, revealing it as rigid and lacking flexibility. What if you didn't want to take a break because you were in a state of flow? What if the 5 minute break was too long and you were ready to resume after just 4 minutes and 30 seconds?

▸ ***Actively cultivate the flow state***

Progressive pomo is built on the premise of setting a time proportional to your focus level.

EXAMPLE FLOW

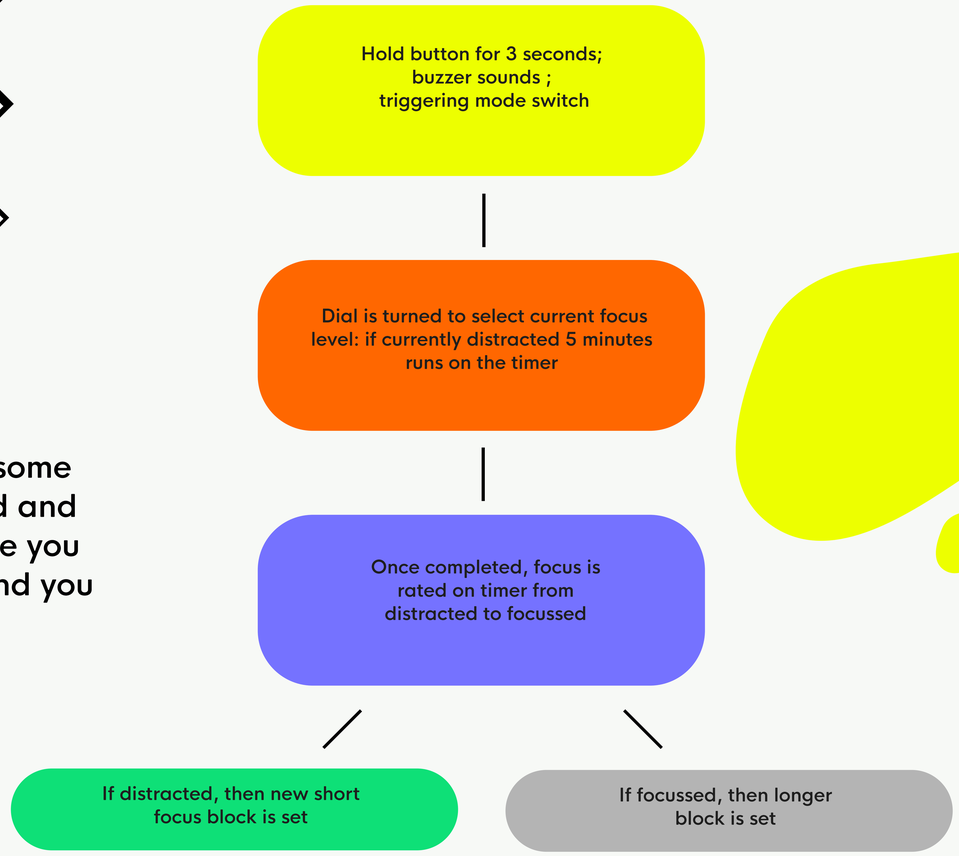

TECHNIQUE FLOW →

1.

Start Small and Get Moving

2.

Rate Your Focus

3.

Break or Continue

4.

Adjust Focus Blocks

dial development

x work louder

▶ WE CHOOSE A DIFFERENT STARTING POINT

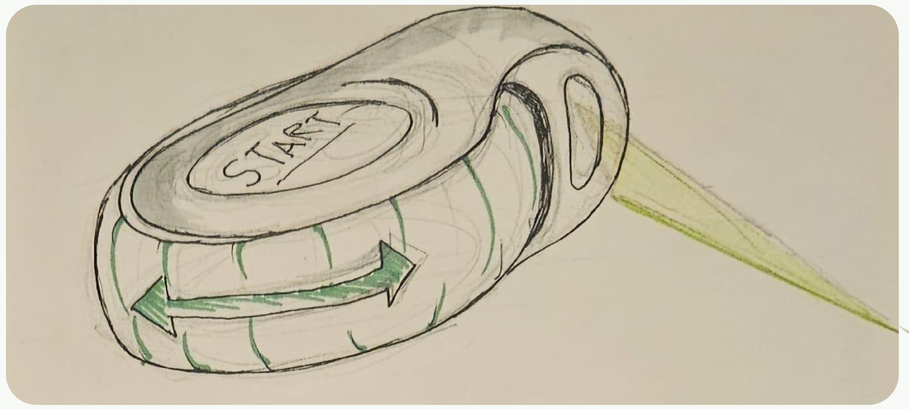

▶ Originally designed: a dial interface with an integrated surface screen doubling as a button and a fixed attached laser module.

▶ *Lofi* prototyping

INITIALLY...

A rivetted bezel: the tips of the fingers are wedged in the rivets while turning the bezel.

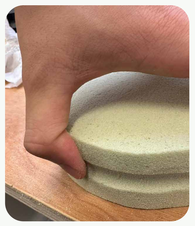

A curved bezel was chosen to optimize hand interaction along the top of the dial, rather than the middle.

Different dial forms were approached with various ridge patterns

Flatter and shorter:
Preferred due to ergonomic fit with palm size: allows users to turn the dial comfortably without excessive finger curvature

Taller and thinner bezel: Rejected due to awkward ergonomics, potential inability and house electronics. It also showed worse portability: we tested putting both forms in a bag and the taller dial was worse.

From this process, a smooth dial was opted for with the following measurements

▶ Dials were 3D printed and radius size and wall thickness was adjusted to suit ergonomics and ISO standards.

Hand clasping in awkward position due to small dial

LASER DEVELOPMENT

x work louder

1 ▸ testing the laser twisting,

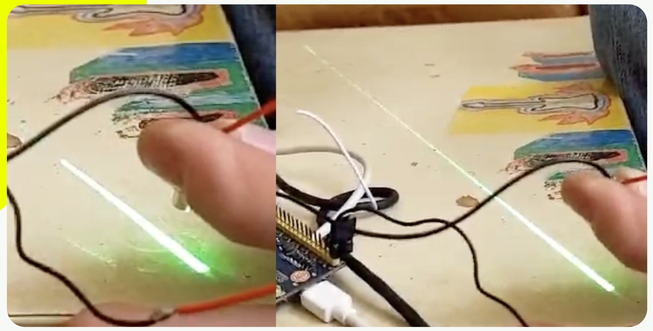

It was found that twisting the laser by 72 degrees projects the laser on the table with a length of 80cm, which was found to be the optimal length when testing on multiple surfaces the product might be used on.

2 ▸ automating the laser twisting,

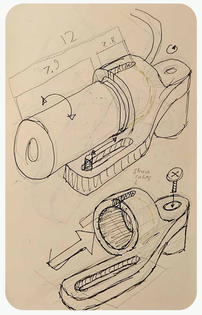

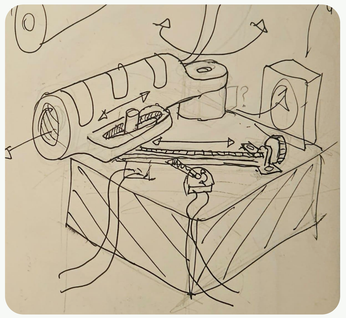

Initial sketch created to show how laser and platform a laser would sit in a holder, whose top end would connect to a rack and pinion (2mm in length). As the pinion moves along its length, the laser's angle changes about its pivot, changing the length of the laser line

3 ▸ calculating laser mechanism dimensions

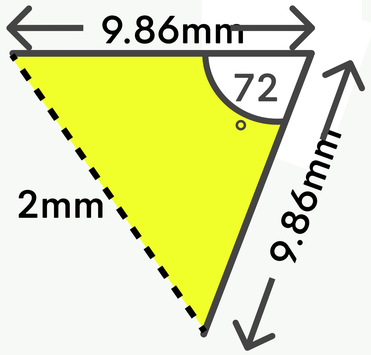

Using the 72° angle from step 1 and the 2mm of the rack and pinion from step 2, 9.86mm was calculated as the length of the laser holder. This measurement also determined the position of the hole on the platform.

4 ▸ developing the laser holder

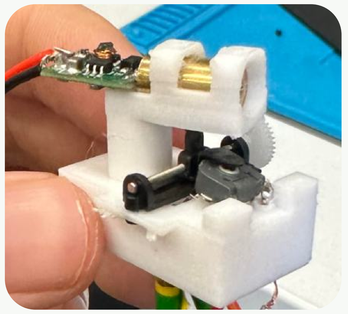

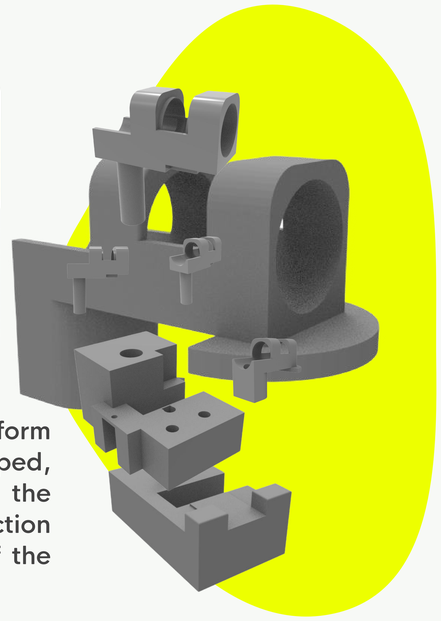

Different laser holders form factors were prototyped, tested and iterated with the intention of minimising friction and increasing stability of the lasers movement.

5 ▸ the laser module

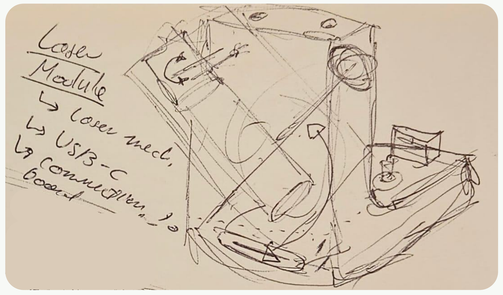

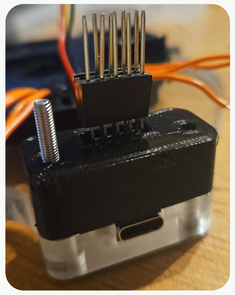

once the design for the precision linear actuator was reliable a casing was designed, and a custom 9 pin connector was designed with alignment features to foolproof disassembly and assembly by users.

OUTCOME

WORK LOUDER ANALYSIS

x w+rk l◆ud◢r

To streamline the design of the laser and dial modules, a brand partner was selected to establish a design language and relate our product ethos to an existing market

w+rk l◆ud◢r

Work Louder makes novel desk devices, specifically innovative keyboards. Work Louder serves a niche: technology enthusiasts who don't have much space on their desk and most importantly a user who can stomach having to relearn how they use a normally used item [3].

wrk.shop ▸ Work Louder have a program called wrk.shop where they select external designers to infuse their unique perspectives in products, staying true to the forward-thinking spirit that defines Work Louder.

▸ Recurring shapes

Work Louder's geometry is distinct. Their branding is threaded with their branding logo: squares, semi circles, circles and plus signs.

▼ *Labelling products*

Work Louder always signature their products with recurring quotes, labels, and logos which establishes their distinct brand on each device. We emulated these pinning our product on their brand. [3]

focus.
work.
rest.

time
line

pr+gr◢ssiv◢ p◆m◆

f+cus.
w◆rk.
r◢st.

made with <3

Work Louder x ZJKJ © 2024

to creative people

From louder minds

made with <3

DEVELOPED DESIGN

▶ **We developed our design with the intention of harmoniously infusing our product's personality with work louder's design language.**

Work louder commonly have transparent casings for part or whole designs, showing physical technical pieces (example image) , we have employed these techniques, with the screen sitting under the surface plate and an acrylic plate, while the laser mechanism is boasted via the acrylic seal on the laser module.

t x work louder

The screen shroud contains our TimeLine x Work Louder Logo (t) as well as progressive pomo, as well as common work louder branding and quotes, seamlessly connecting our product with the company.

Timeline follows the design language of work louder products by making use of the companies logo in both the decals as well as the geometry of the product.
how many can you find ?

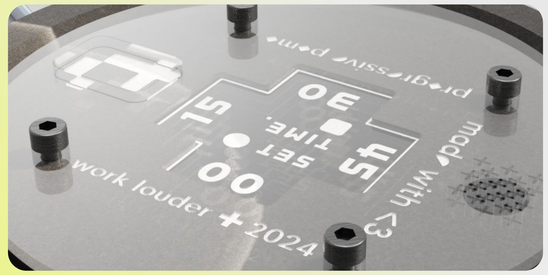

Colour Choices: After testing many colour with reference to the colour wheel, a black pallette was used, with a white accent colour for the pointer of the dial, and a green accent colour as the laser this felt as if it alligned best with work louderfs existing designs

The laser module is modular. It is replaceable with: different colour lasers, a variation that projects the laser on a wall, and is removable completely: of which a neo pixel threaded around the bottom of the device takes over, incremently depleting as the timer does.

components and power

t. x work louder

▼ Standard electrical components used, their brief descriptions and power requirements.

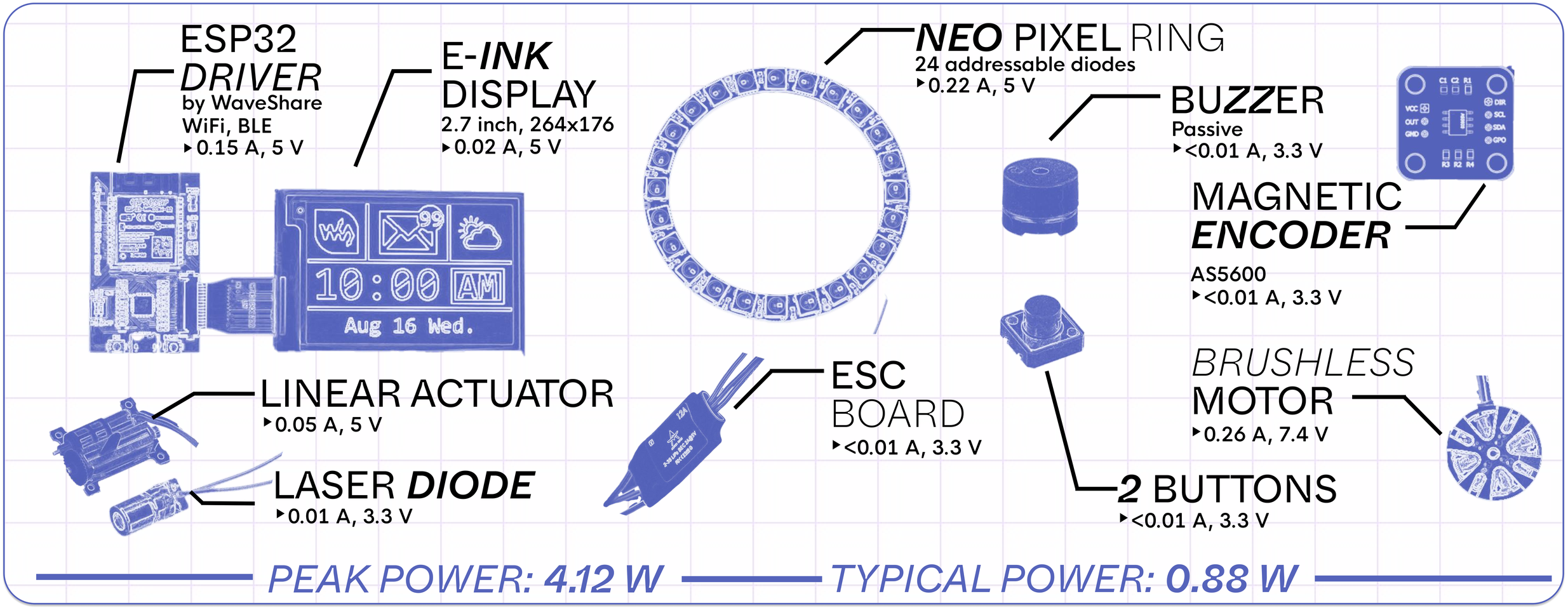

Powered by:

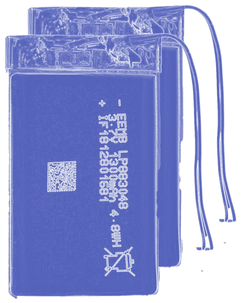

2 LI-PO *BATTERIES*
2 batteries in series
with a balancing BMS
1300 mAh of capacity
7.4 V output

+

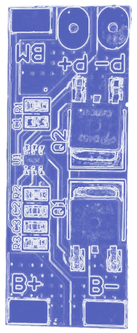

BALANCING BMS
Overcharge protection
Ensures equal charge for both cells

+

USB-C

CAPACITY: 9.6 Wh

UP TO **12** HOURS OF BATTERY LIFE

works like prototypng

x work louder

CASING DESIGN & *MECHATRONIC DESIGN*

▼ SKETCHING

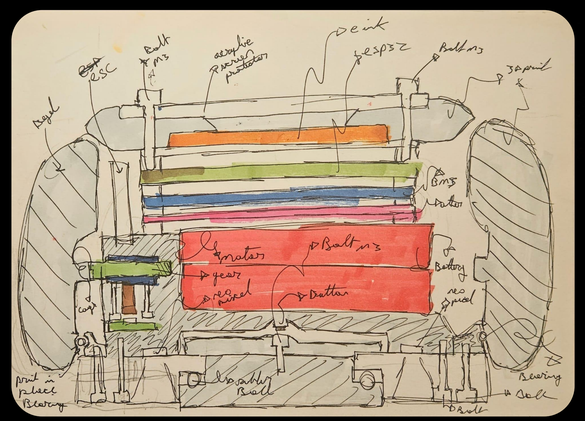

Initial sketch of all the components and internal electrical housing after initial LO-FI prototyping.

sketches provided an effective method of communicating ideas between team members helping to plan components and mitigate errors in the CAD

CAD & SIMULATION

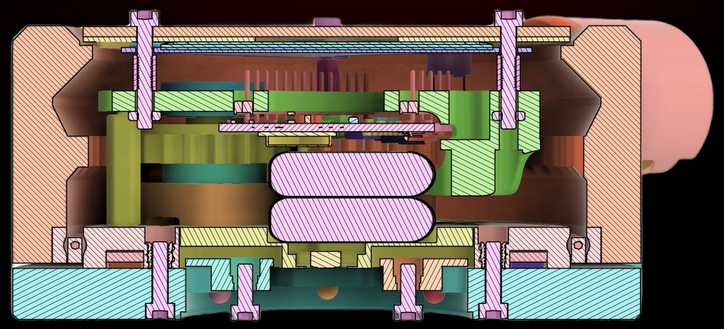

All the mechanisms where designed In Fusion 360 as separate assemblies that where combined in a final file, this allowed for each element to be designed independently streamlining the editing process. only CAD that passed quality and tolerance checks where manufactured for testing.

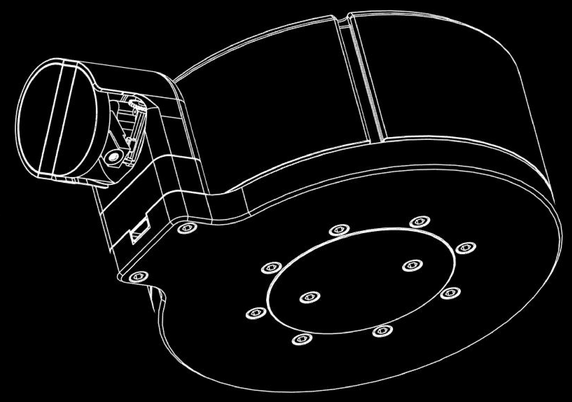

MANUFACTURE

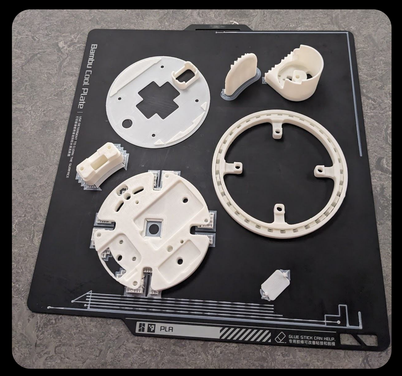

the overall assembly made use of multiple manufacturing methods.

- CNC routing
- Laser cutting
- Lino cutting
- 3d printing

Due to the device being a prototype the manufacturing processes used where not optimised for mass manufacture but instead rapid prototyping however much of the geometry is applicable to existing mass manufactuyring techniques.

PHYSICAL & ELECTRONIC TESTING

Individual Testing

decomposition and abstraction was used to test and code for electrical components, tolerances of physical parts where tested.

Module Testing

smaller modules where gradually added together troubleshooting and problem solving, dimensional inaccuracies in the CAD where filters out by this point.

Integration

once everything was working independently the sub assemblies where assembled

COLOUR, MATERIALS & FINISHES

x work louder

Timeline is designed to capture attention when needed and camouflage when not. Its features are distinct yet unobtrusive, incorporating novel features that serve practical purposes foundational to their function.

Laser Module

Despite being physical extension of the main body, the laser module is very much integral to TimeLine.

Engraved with Work Louder's distinctive shapes, the modular laser module epitomises the timer's innovative design. The module - sitting behind acrylic - showcases its mechanism to the user. The laser peeks out from various angles, boldly making its presence known.

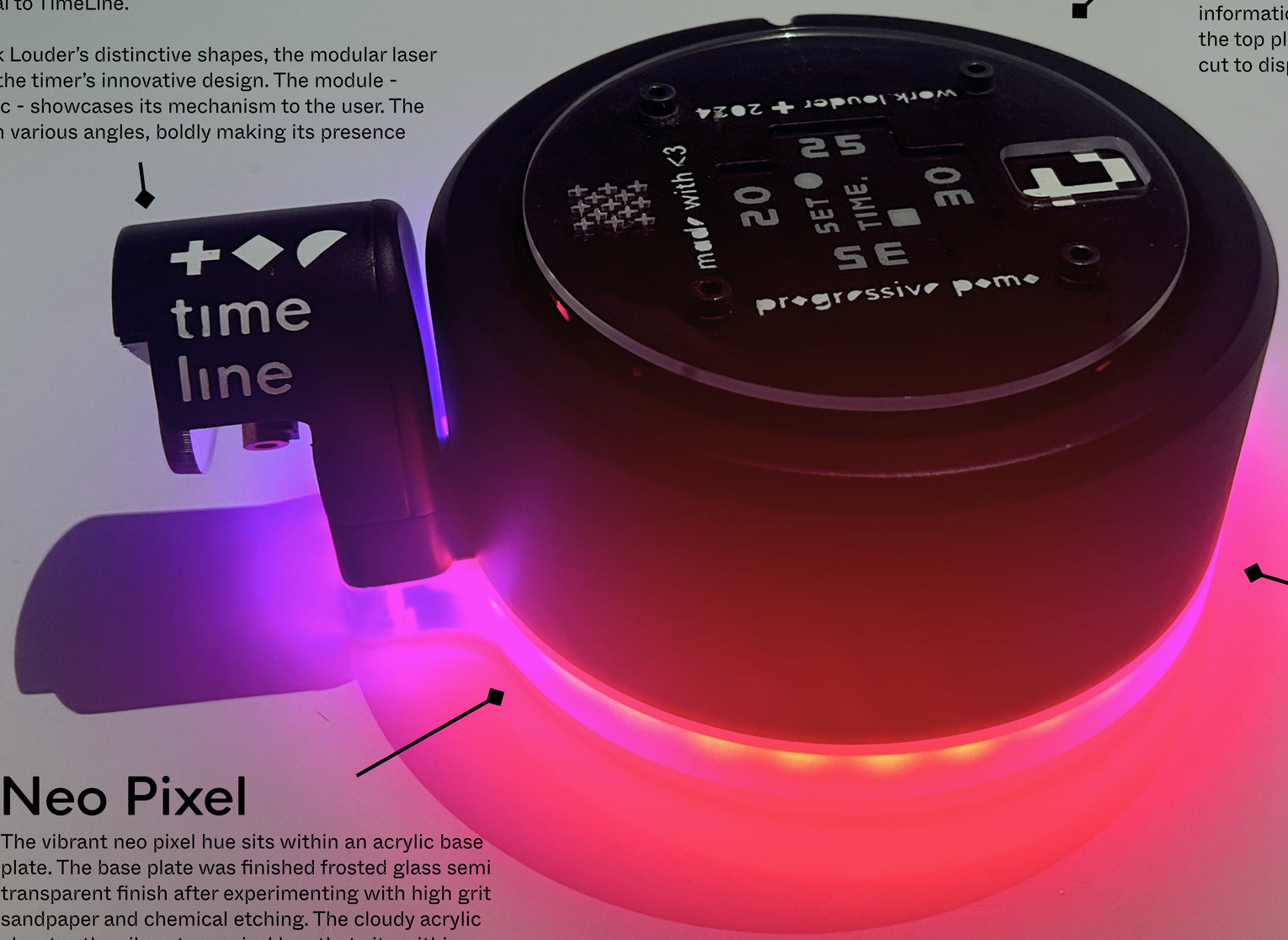

Surface

The E INK display is embedded under the top plate, camouflaging its background to vividly show vital interface information. The logos and statements were spray painted on the top plate. The plate sits underneath an acrylic plate, laser cut to display speaker grooves and the on/off button.

Dial

The dial is defined by its indented pointer which serves as a pointer for the user interface.

The black dial was finished with wood filler, primer filler, sanding top coat of paint, and a matte finish top coat to prevent scratches and flaking.

The dial was chamfered and beveled to eliminate sharp edges, ensuring a comfortable fingertip grip for easy spinning.

Neo Pixel

The vibrant neo pixel hue sits within an acrylic base plate. The base plate was finished frosted glass semi transparent finish after experimenting with high grit sandpaper and chemical etching. The cloudy acrylic elevates the vibrant neo pixel hue that sits within.

dial module dfma

x work louder

Electronics assembly

Base assembly

bezel assembly

▼ designed with modularity and repairability in mind, comprised of three easily seperated sub assemblies

Electronics module

- optimized geometry and use of standoffs allowed for short print times.
- split into 4 quatres serving different purposes.
  a. power
  b. motor assembly
  c. wire management
  d. logic
- houses all key electronic components.

Bezel

slots in upper lip prevents electronics assembly from being installed incorrectly.

Base plate

final step in the assembly process insuring correct alignment between all assemblies.

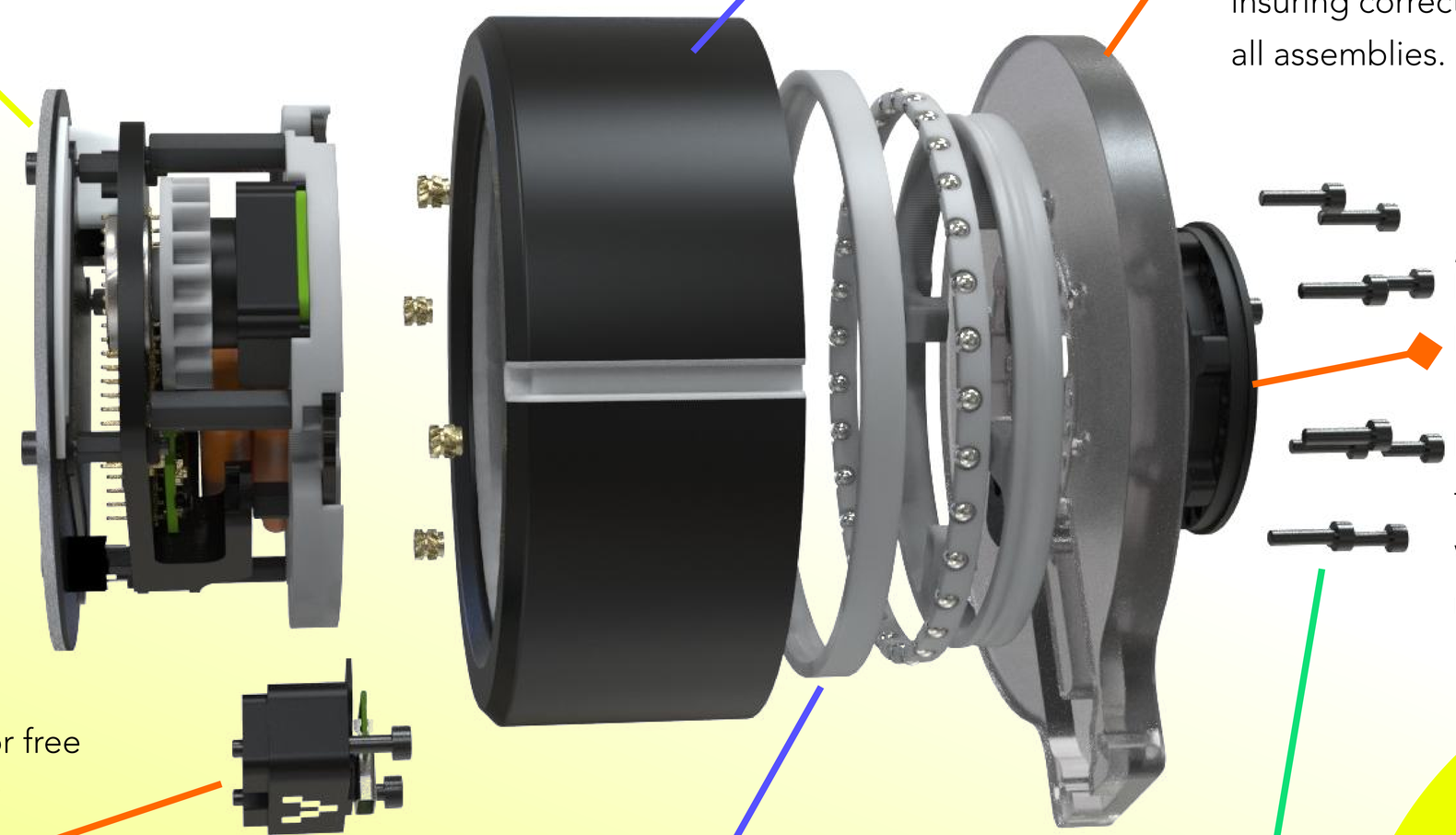

Button plate

button plate is fixed onto base plate separated by a layer of silicone rubber balls allowing for translation up and down whilst being locked from rotating.

laser plug

- custom connector for error free connection between laser module and dial.
- usb c allows for charging, software updates and debugging.

Bearing

bearing aligns electronic module and press fits into bezel insuring correct alignment of assemblies.

standardized hardware

standard 3M hex bolts are used in unison with heated threaded inserts allowing assembly of the three modules using 1 tool.

14 minutes

To assemble sub assemblies

0 Adhesives

used in construction

dial module dfma

x work louder

▼ designed with modularity and repairability in mind

standard components

custom components

view port

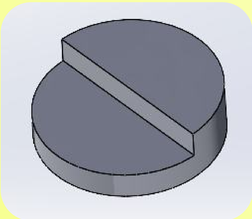

- tight fit
- tolerance to ISO 2768 fine
- laser cut
- high accuracy

snap fitting

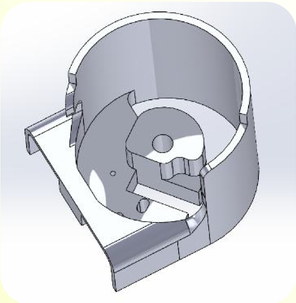

- tolerance to ISO 2768 medium

- flushed fit

mechanism
standard component

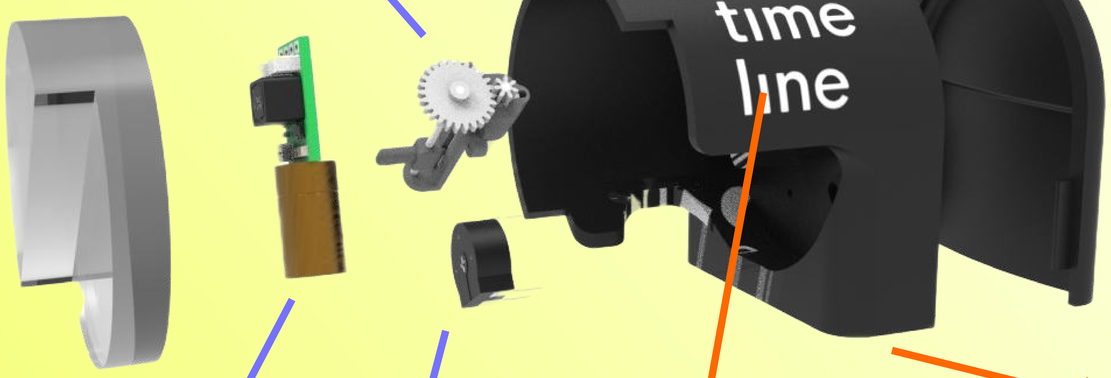

laser
class 1
<1mW

potentiometer
standard component

decal
spray painted

laser plug

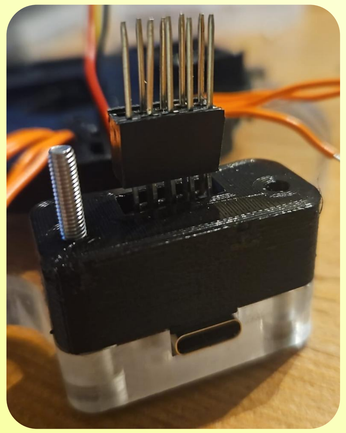

used to connect laser holder:

- flush surface
- easy alignment

future snap fit - attaching the laser module

~~threaded inserts~~ ⟶ **u-shaped cantilever**

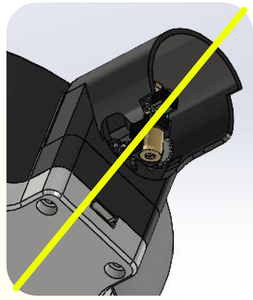

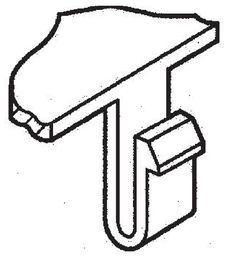

- ~~2 threaded screw holes~~
- ~~tools required for assembly~~
- ~~additional costs for screws~~

used to connect laser holder:

- reduces manufacturing time
- reduced labour costs

15 minutes

To assemble laser module

0 Adhesives

used in construction

Assembly Process *1 hour 54 mins*

x

▼ E-ink display module assembly *20 Mins*

Add decals

Press fit toggle button

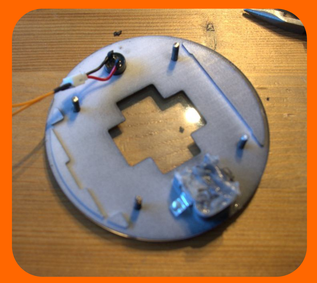
mount buzzer and screen protector

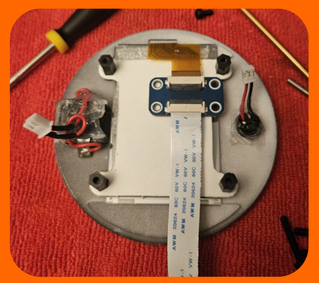
Install screen

▼ BEARING SUBASSEMBLY *10 Mins*

assemble components

Arrange the parts and insert steel balls

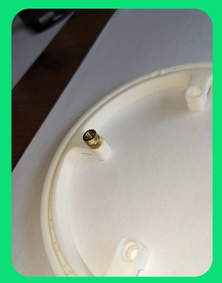
insert heated press fits

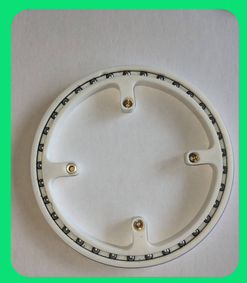
Arrange the parts and insert steel balls

▼ DIAL AND ELECTRONICS SUBASSEMBLY *1 Hour*

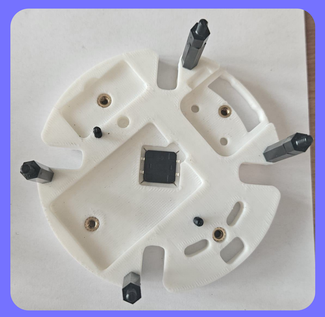
heated press fits and hardware installation on electronics casing

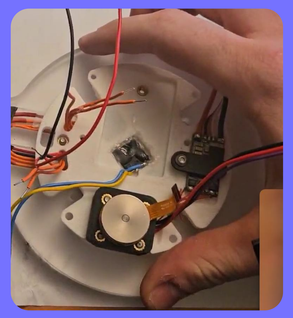
Install motor assembly, button and laser wires

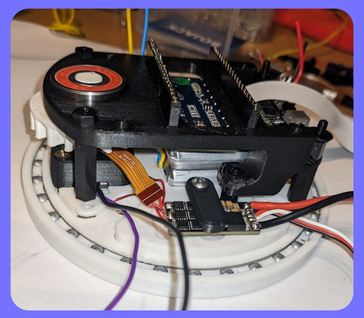
Add esp 32 mounting assembly, bearing and battery system

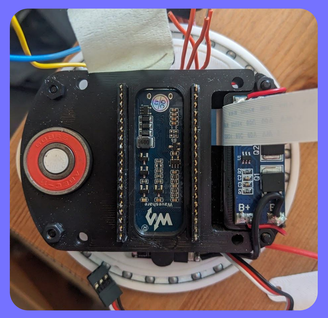
solder connections

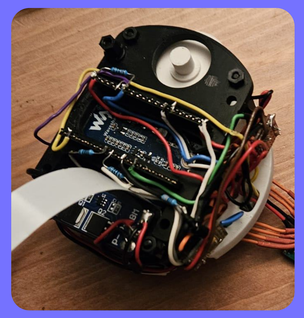
route wiring

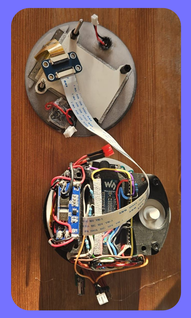
secure to screen module

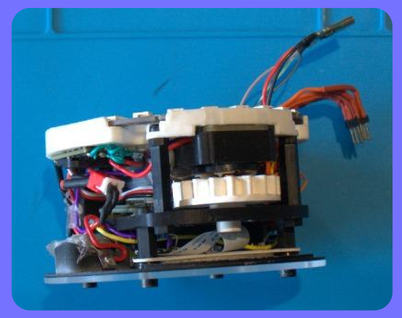
quality control, ensuring no wires will clash with the bezel

▼ LASER MODULE ASSEMBLY *15 mins*

assemble components and place electronics in casing

solder, test and tune laser

▼ FINAL ASSEMBLY *14 Mins*

press fit bearing into dial and insert electronics module

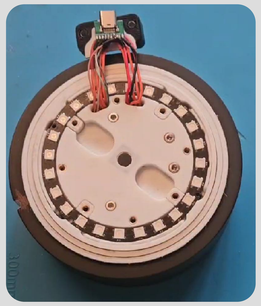
mount neo pixel and neaten wiring

mount and fasten base plate

install laser module plug and check bezel rotation

admire your handywork :)

COMPANION APP

Enhancing the user experience our customer expect from **work louder**
our app allows users to ***customise*** their interaction methods

The companion acts as a **mentor** for the user,
providing ***feedback*** towards how well they focussed
in each event logged on

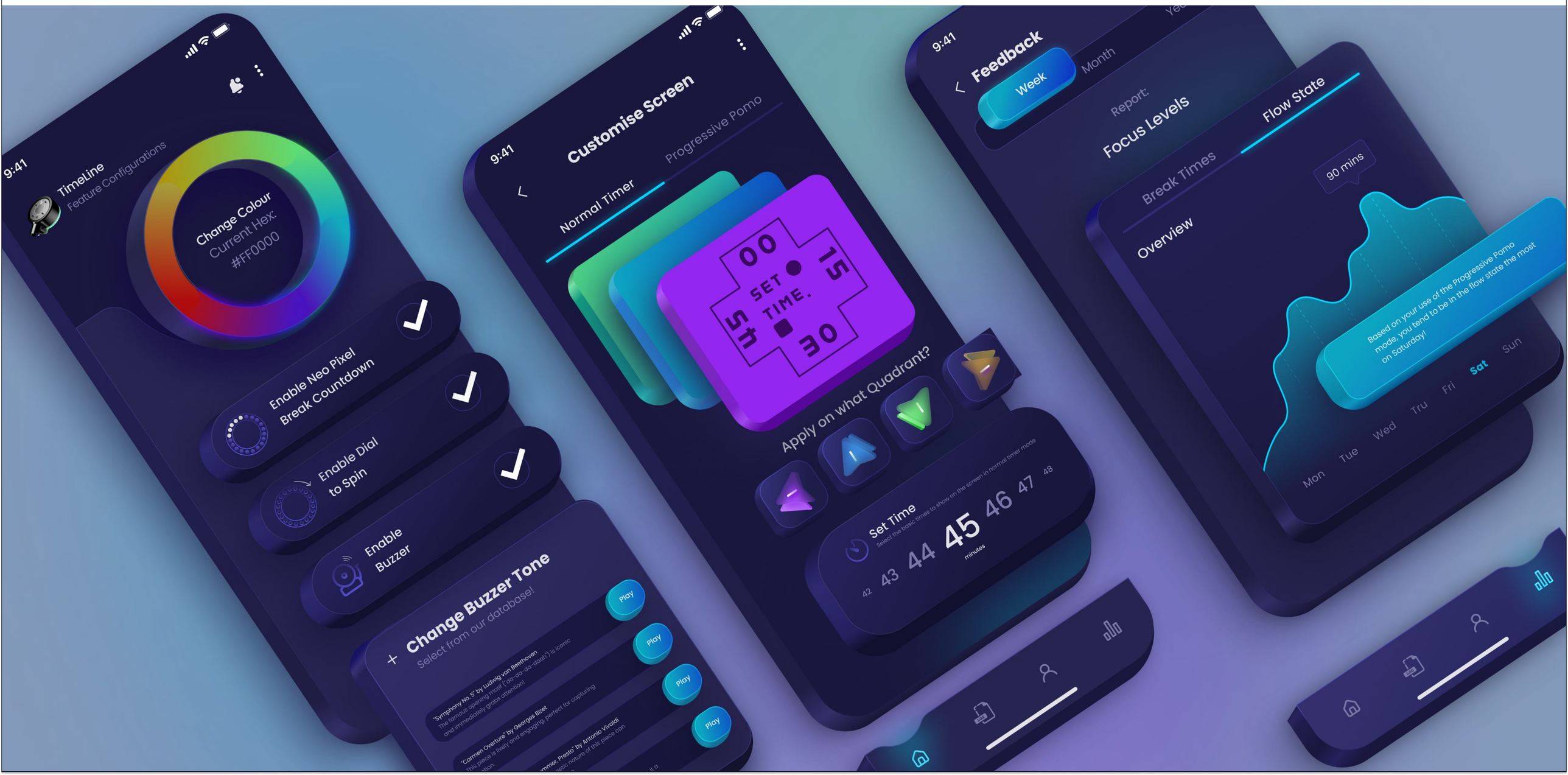

packaging

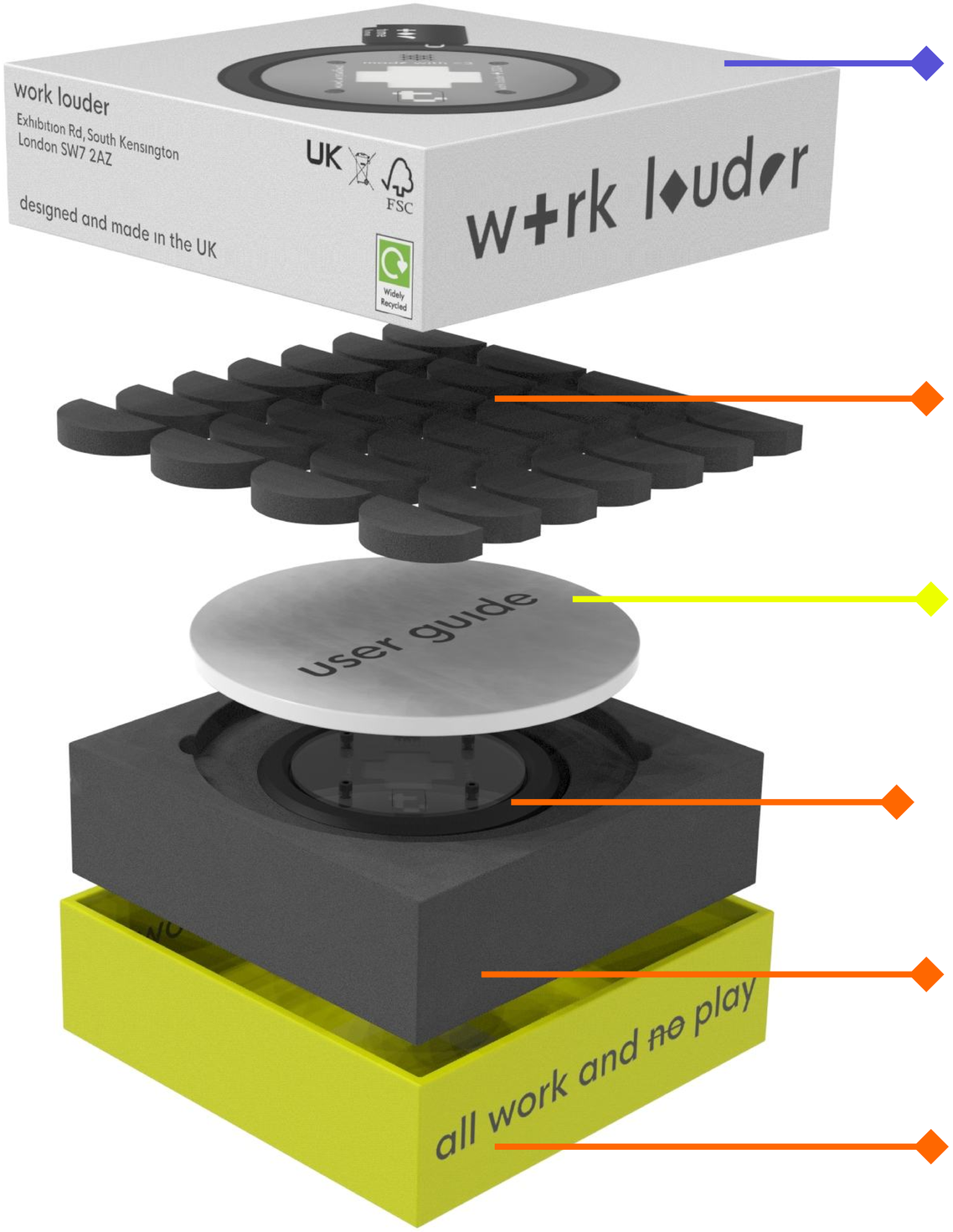

packaging lid

Printed cardboard to grab attention, printed with all relevant compliances.

semi-circle protective foam

semi-circles to create an interactive experience upon opening, made from renewable easily sourced materials.

user manual and safety guide

circular user manual follows shape of timeline product for consistency

Timeline

circular user manual follows shape of timeline product for consistency

packaging foam

packaging foam fitting product perfectly for protection

outer package

taken inspiration from Work Louder packaging

top

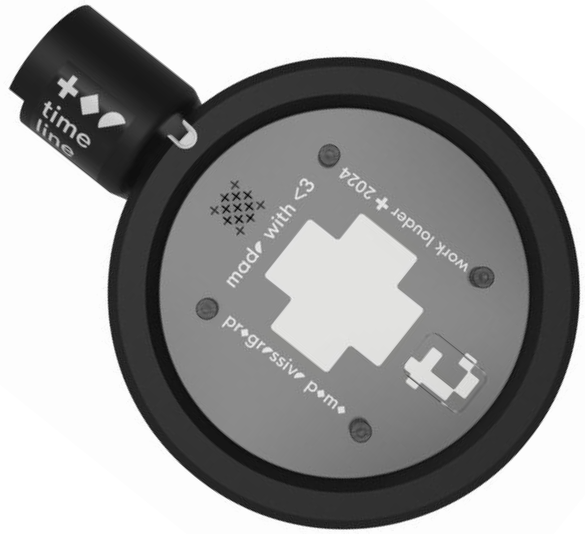

user guide

semicircles fall out when user opens packaging - inspiration from Work Louder

work louder
Exhibition Rd, South Kensington
London SW7 2AZ
UK
FSC
designed and made in the UK
Widely Recycled
w+rk l◆ud◜r

all work and ~~no~~ play

PRODUCT COMPLIANCE

x

Safety Guide

Timeline

IMPORTANT

For more information see worklouder.cc/timelineinfo

Scan the QR code below for a more readable version of this guide

Caution

Do not put heavy items on top of your TimeLine.

It may cause damage to the touch screen

Important Safety Instructions

1. Read these instructions.
2. Keep these instructions.
3. Heed all warnings.
4. Follow all instructions.
5. Do not use this apparatus near water.
6. Clean only with a dry cloth.
7. Do not block any ventilation openings. Install in accordance with the manufacturer's instructions.
8. Do not install near any heat sources such as radiators, heat registers, stoves, or other apparatus (including amplifiers) that produce heat.
9. Do not defeat the safety purpose of the polarized or grounding-type plug. A polarized plug has two blades with one wider than the other. A grounding type plug has two blades and a third grounding prong. The wide blade or the third prong is provided for your safety. If the provided plug does not fit into your outlet, consult an electrician for replacement of the obsolete outlet.
10. Protect the power cord from being walked on or pinched, particularly at plugs, convenience receptacles, and the point where they exit from the apparatus.

- Only use attachments/accessories specified by the manufacturer.
- Use only with the cart, stand, tripod, bracket, or table specified by the manufacturer, or sold with the apparatus. When a cart is used, use caution when moving the cart/ apparatus combination to avoid injury from tip-over.
- Unplug this apparatus during lightning storms or when unused for long periods of time.
- Refer all servicing to qualified service personnel. Servicing is required when the apparatus has been damaged in any way, such as power-supply cord or plug is damaged, liquid has been spilled or objects have fallen into the apparatus, the apparatus has been exposed to rain or moisture, does not operate normally, or has been dropped.
- WARNING: To reduce the risk of fire or electric shock, do not expose this appliance to rain or moisture. Do not expose this equipment to dripping or splashing and ensure that no objects filled with liquids, such as vases, are placed on the equipment.

The lightning flash with an arrowhead symbol within an equilateral triangle is intended to alert the user to the presence of uninsulated "dangerous voltage" within the product's enclosure that may be of sufficient magnitude to constitute a risk of electric shock to persons.

The exclamation point within an equilateral triangle is intended to alert the user to the presence of important operating and maintenance (servicing) instructions in the literature accompanying the product.

The product can only be switched off completely by disconnecting it from the mains socket. The mains socket must always be accessible.

No naked flame sources, such as lighted candles, should be placed on the product.

Make sure the cable connection between the product and the router does not exit the building to avoid contact with high voltage.

1. Read these instructions.
2. Keep these instructions.
3. Heed all warnings.
4. Follow all instructions.
5. Do not use this apparatus near water.
6. Clean only with a dry cloth.
7. Do not block any ventilation openings. Install in accordance with the manufacturer's instructions.
8. Do not install near any heat sources such as radiators, heat registers, stoves, or other apparatus (including amplifiers) that produce heat.
9. Do not defeat the safety purpose of the polarized or grounding-type plug. A polarized plug has two blades with one wider than the other. A grounding type plug has two blades and a third grounding prong. The wide blade or the third prong is provided for your safety. If the provided plug does not fit into your outlet, consult an electrician for replacement of the obsolete outlet.
10. Protect the power cord from being walked on or pinched, particularly at plugs, convenience receptacles, and the point where they exit from the apparatus.

CAUTION

Important!

- Avoid placing the product in direct sunlight or direct artificial light, such as a spotlight.
- Make sure that the product is set up, placed, and connected in accordance with the instructions.
- Place your product on a firm surface or stand where you want it placed permanently. Use Bang & Olufsen approved stands and wall brackets only!
- Do not place any items on top of your product.
- Do not subject the product to high humidity, rain, or sources of heat.
- The product is intended for indoor use in dry, domestic environments only. Use within a temperature range of 10–40°C (50–105°F).
- Leave enough space around the product for adequate ventilation.
- WARNING: To reduce the risk of fire or electric shock, do not expose this appliance to rain or moisture. Do not expose this product to dripping or splashing and ensure that no objects filled with liquids, such as vases, are placed on the equipment. To completely disconnect this equipment from the AC Mains, disconnect the mains plug from the wall socket. The wall socket must always be easily accessible.

model no 431-02222-C

UK CA FSC

m2190
214
214joi

worklouder
Exhibition Rd, South Kensington, London SW7 2AZ

Product Labelling

Sits at the base of product

Package Labelling

worklouder
Exhibition Rd, South Kensington, London SW7 2AZ

designed and made in the UK

UK CA FSC Widely Recycled

model no 431-02222-C

CLASS 1 Laser product

Warning Laser Symbol Label

Compliance

The Work Louder logo and TimeLine product branding on the packaging create a compelling brand identity, with the product code and serial number ensuring seamless identification for customer support and warranty services. Regulatory compliance is maintained with the manufacturer's name and address clearly stated. The packaging proudly features regulatory marks like CE and UKCA, alongside environmental symbols such as the Mobius Loop, signaling the product's recyclability and eco-friendly commitment. Additionally, a safety information leaflet is included to ensure users handle and dispose of the product properly. [10]

USER GUIDES

x w+rk l◆ud◢r

▶ ONLINE GUIDE

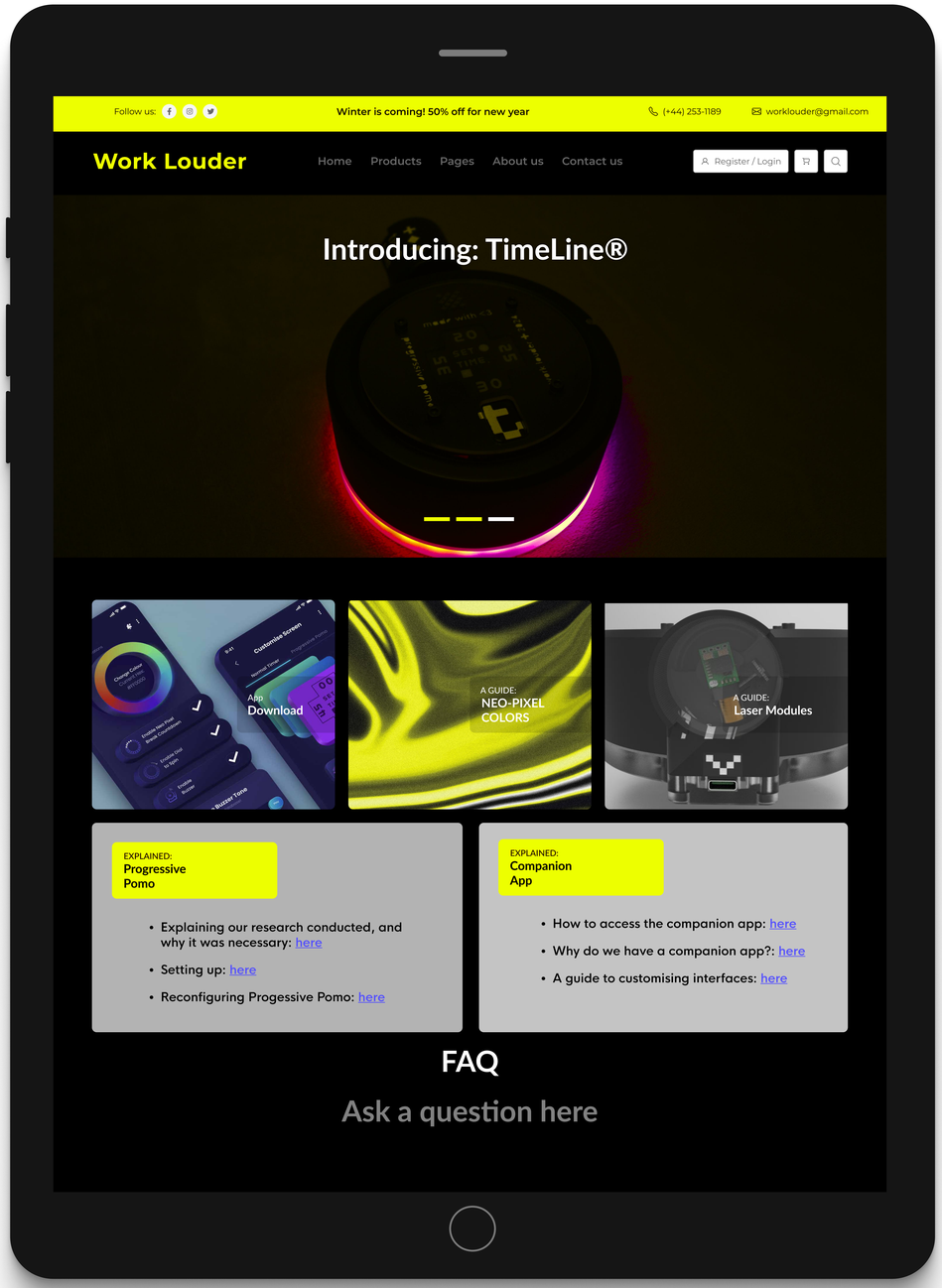

▶ QUICK START GUIDE

Final Render

Click here to see this product come to life!

timeline
made with <3

Know Productivity ⚡, Efficiency ⚙️, Passion ❤️‍🔥, Creativity 🎨 with no limits. -

GANTT CHART

x work louder

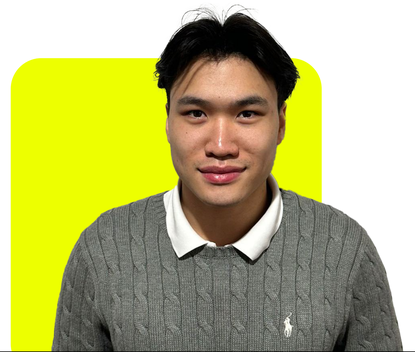

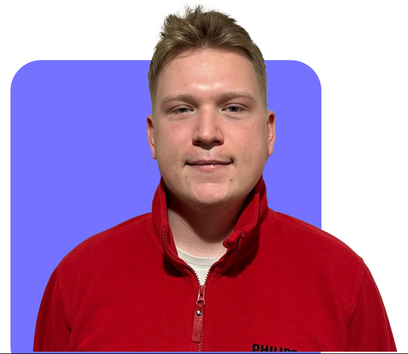

PRODUCT DATA PACKAGE

x

w+rk l◆ud◢r

General Assembly

x

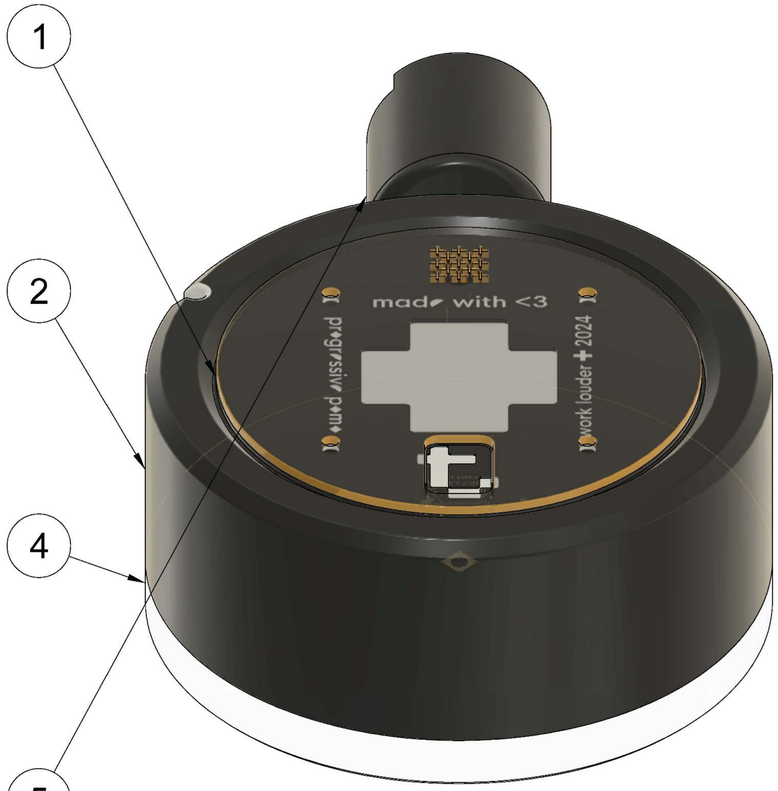

Parts List

Item	Qty	Part Number
1	1	Upper cover subassembly
2	1	Bearing and dial
3	1	Upper cover subassembly
4	1	Base Plate subassembly
5	1	Laser module
6	1	24 neopixel v5
7	1	Dial Subassembly
8	1	HX-2S-JH20
9	1	Brushelss motor
10	1	Laser
11	2	3.7v li-ion 500mah Battery
12	1	Battery Management Sys.
13	1	USB-C
14	1	AS5600_Component1
15	1	DJImotor
19	1	CYCLONE 35A
22	1	Hardware

Dept.	Technical reference	Created by Krzysztof Wancerski 20/06/2024	Approved by
		Document type	Document status
		Title render file	DWG No.
			Rev. / Date of issue / Sheet 1/16

General Assembly

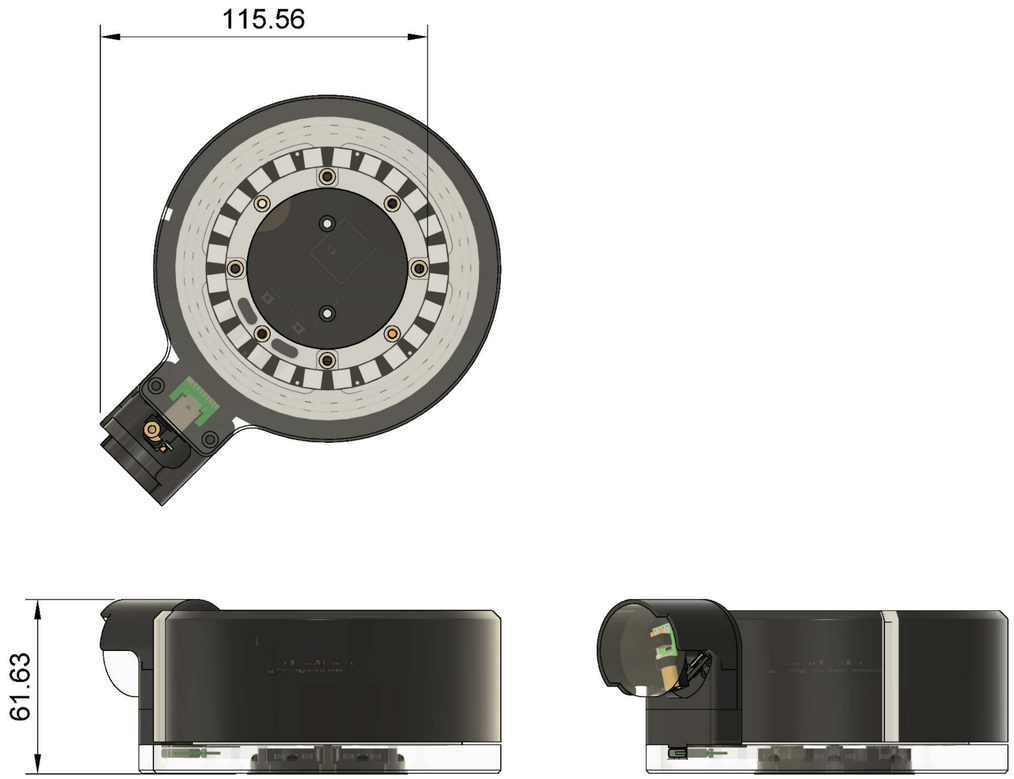

Dept.	Technical reference	Created by	Approved by
		Krzysztof Wancerski 20/06/2024	
		Document type	Document status
		Title render file	DWG No.
			Rev. / Date of issue / Sheet 2/16

Internal Subassembly

x work louder

Parts List		
Item	Qty	Part Number
1	1	Motormochup v1
2	1	Smallgear_Component8 v1
3	1	E-Paper Esp32 v1
4	1	Esc clamp
5	1	Motor mount
6	1	Inner housing
7	1	Elec holder
8	1	BMS holder

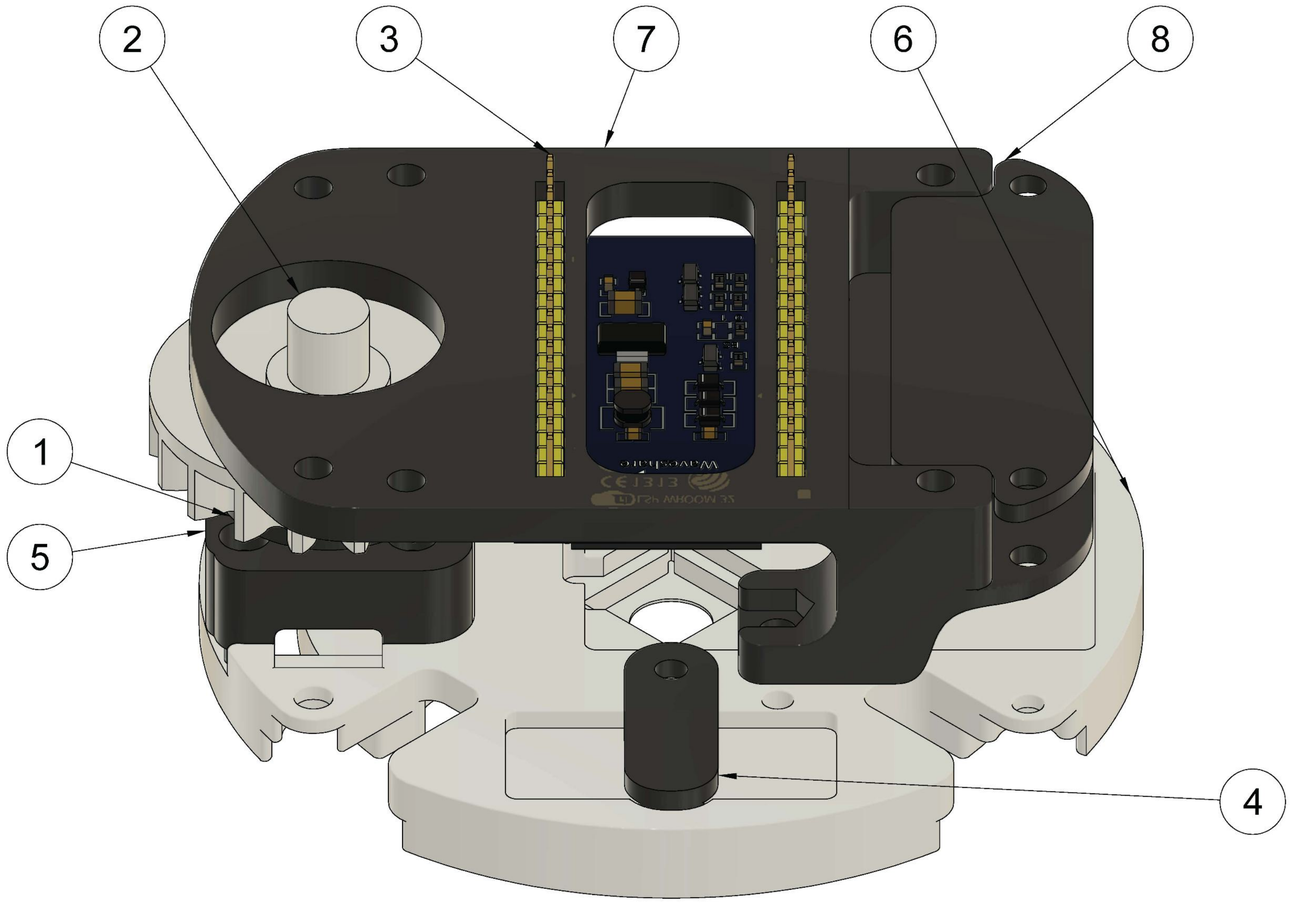

Dept.	Technical reference	Created by	Approved by
		Krzysztof Wancerski 20/06/2024	
		Document type	Document status
		Title: render file	DWG No.
			Rev. / Date of issue / Sheet 7/16

Internal Subassembly

x w+rk l◆ud◢r

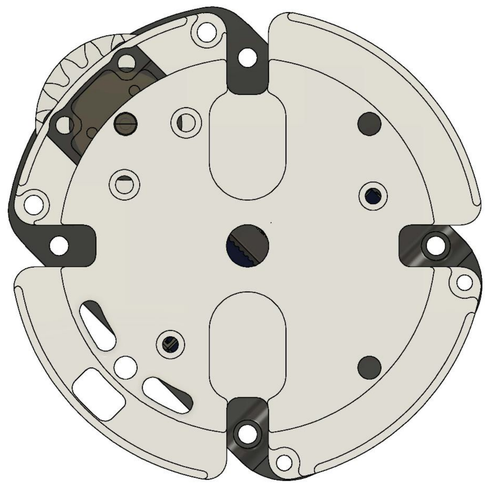

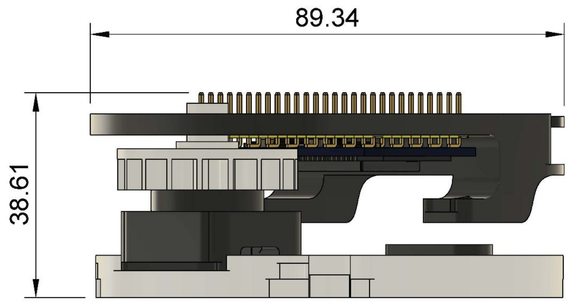

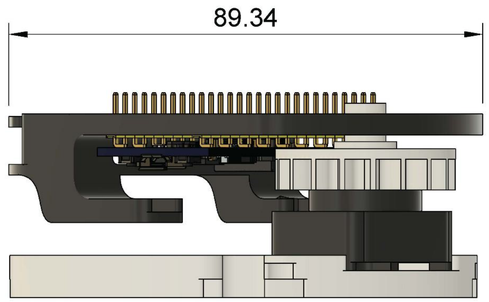

Dept.	Technical reference	Created by Krzysztof Wancerski 20/06/2024	Approved by
		Document type	Document status
		Title render file	DWG No.
			Rev. / Date of issue / Sheet 8/16

Upper Cover Subassembly

x work louder

Parts List		
Item	Qty	Part Number
1	1	GDEY027T91 v5 v1
2	1	Screen shroud
3	1	Screen clamp (1)
4	1	Screencover
5	1	Active_Buzzer2

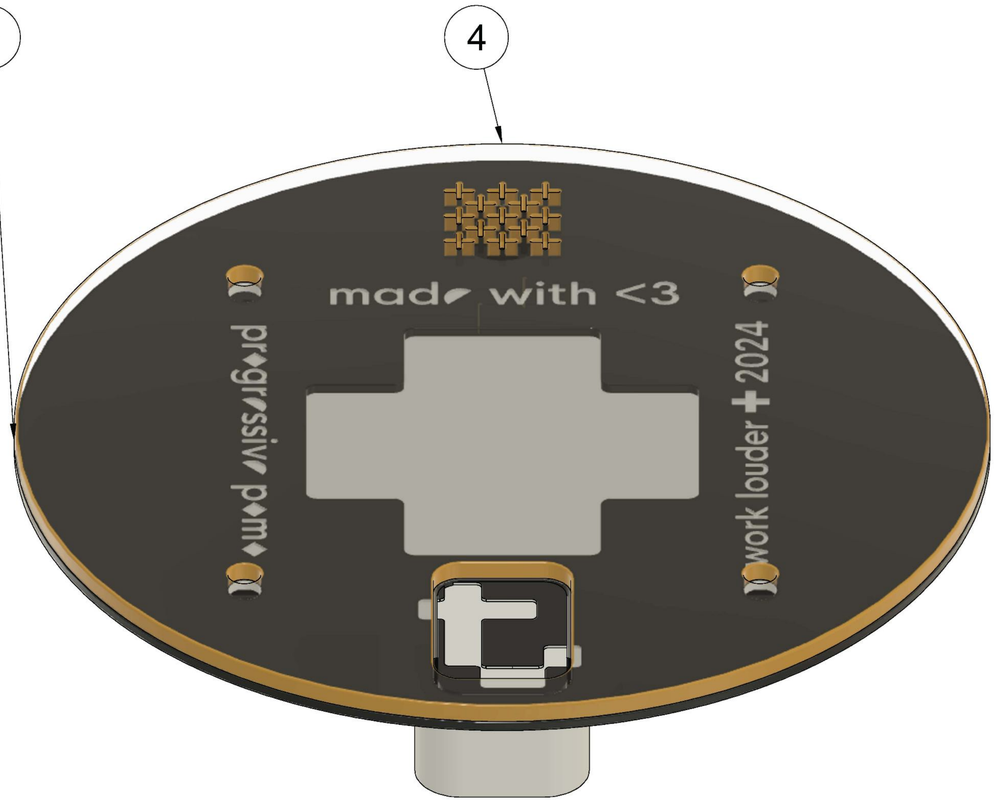

Dept.	Technical reference	Created by	Approved by
		Krzysztof Wancerski 20/06/2024	
		Document type	Document status
		Title: render file	DWG No.
			Rev. / Date of issue / Sheet 3/16

Upper Cover Subassembly

x work louder

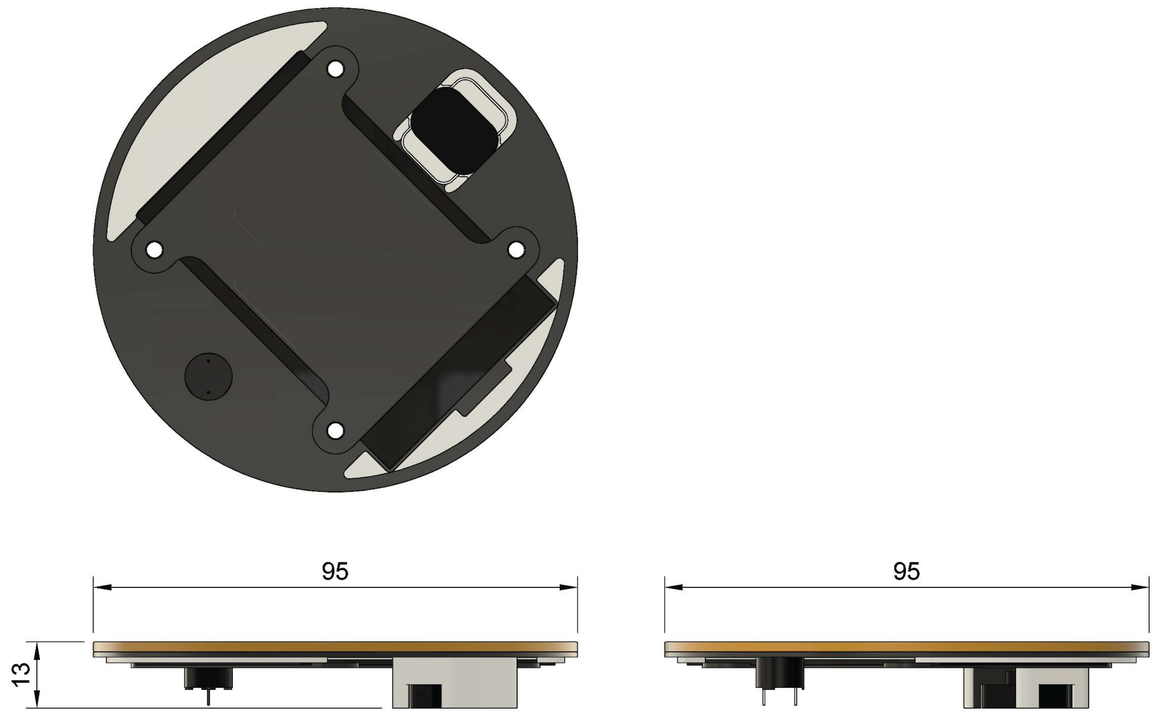

Dept.	Technical reference	Created by Krzysztof Wancerski 20/06/2024	Approved by	
		Document type	Document status	
		Title render file	DWG No.	
			Rev. / Date of issue	Sheet 4/16

Base Plate Subassembly

x w+rk l◆ud◢r

Parts List		
Item	Qty	Part Number
1	1	Base plate
2	1	Button base
3	1	Lock 1
4	1	Lock 2
5	1	Usbc holder

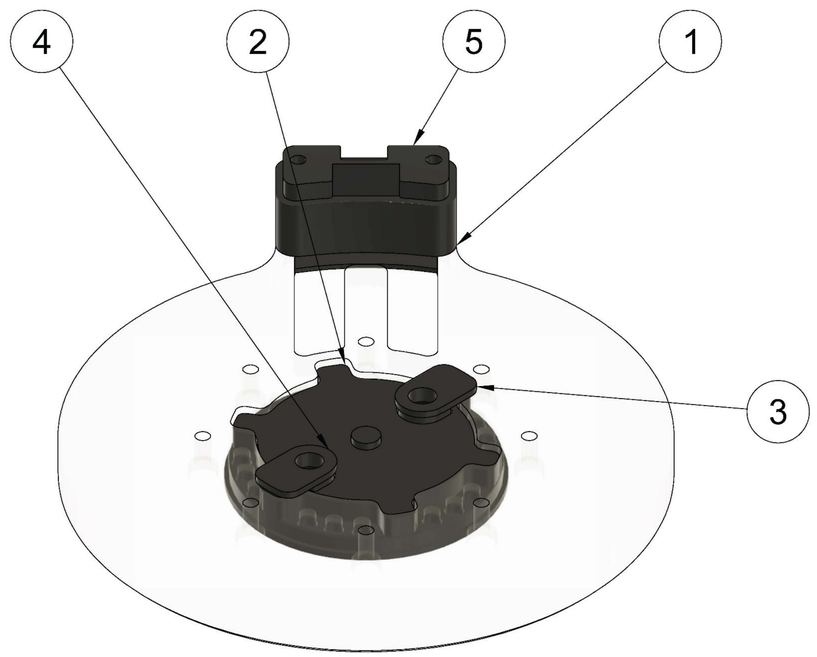

Dept.	Technical reference	Created by Krzysztof Wancerski 20/06/2024	Approved by
		Document type	Document status
		Title render file	DWG No.
			Rev. / Date of issue / Sheet 9/16

Base Plate Subassembly

x

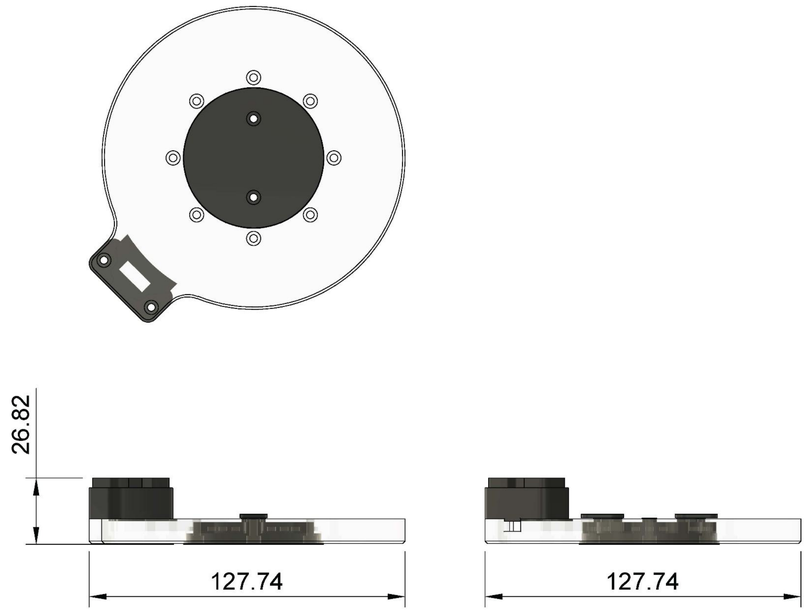

Dept.	Technical reference	Created by	Approved by
		Krzysztof Wancerski 20/06/2024	
		Document type	Document status
		Title render file	DWG No.
			Rev. / Date of issue / Sheet 10/16

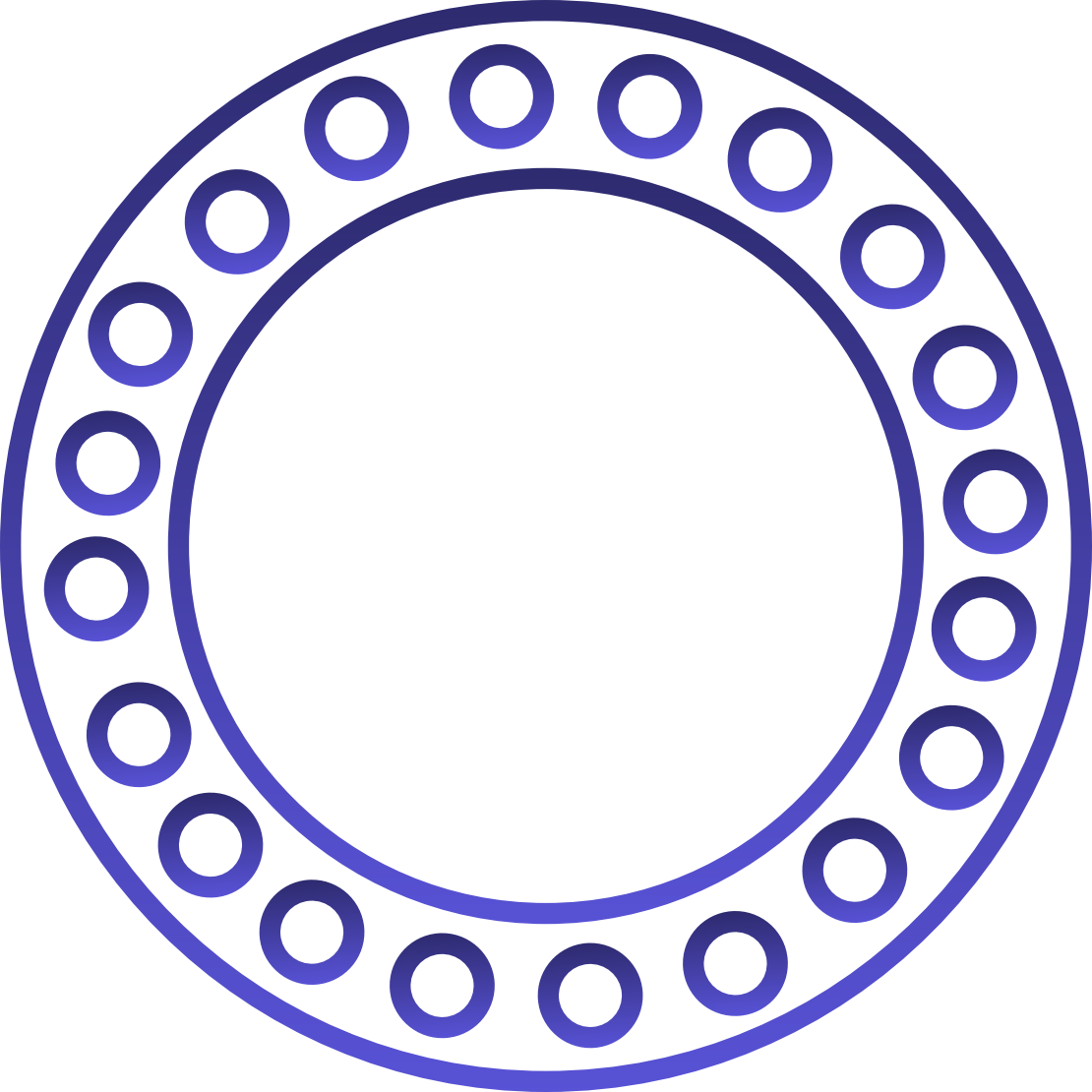

Dial Subassembly

x work louder

Parts List			
Item	Qty	Part Number	Material
1	1	Bearing	
2	1	Planaterygear_Component9 v1	
3	1	Bearing balls	

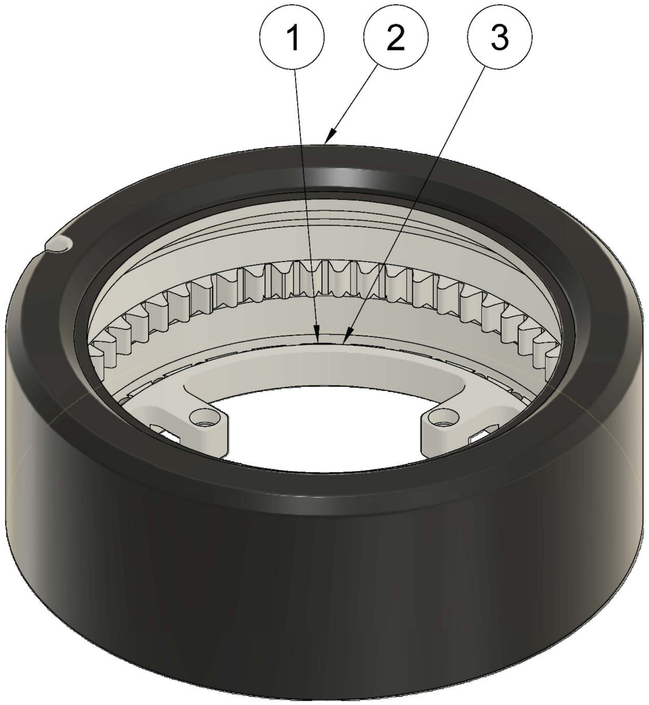

Dept.	Technical reference	Created by	Approved by
		Krzysztof Wancerski 20/06/2024	
		Document type	Document status
		Title: render file	DWG No.
			Rev. / Date of issue / Sheet 5/16

Dial Subassembly

x

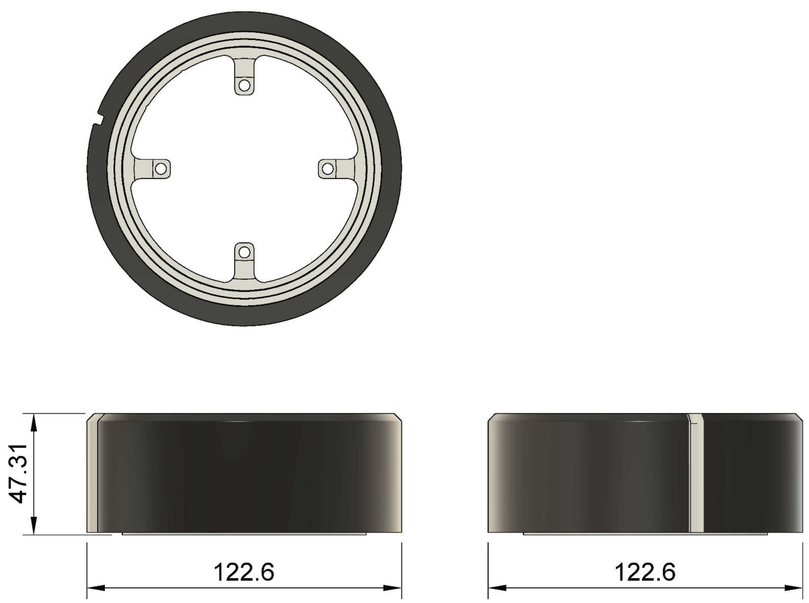

Dept.	Technical reference	Created by Krzysztof Wancerski 20/06/2024	Approved by
		Document type	Document status
		Title render file	DWG No.
			Rev. / Date of issue / Sheet 6/16

Laser Module Subassembly

x w+rk l◆ud◢r

Parts List		
Item	Qty	Part Number
1	1	Laser module 5-6-24 3.2 v1
2	1	Acrylic semi circle
3	1	Laser cap

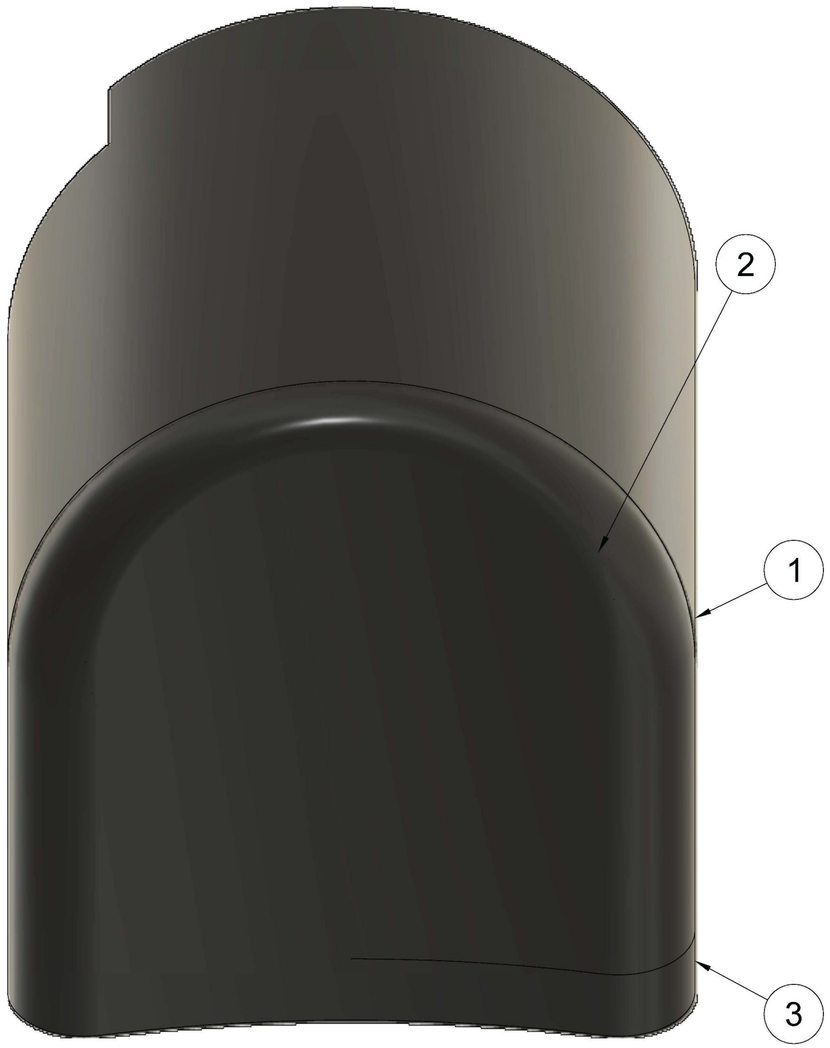

Dept.	Technical reference	Created by Krzysztof Wancerski 20/06/2024	Approved by
		Document type	Document status
		Title render file	DWG No.
			Rev. / Date of issue / Sheet 11/16

EXPLODED VIEW

x

EXPLODED VIEW 2

x

Bevel Technical Drawing

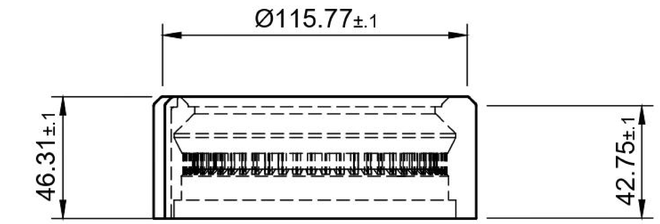

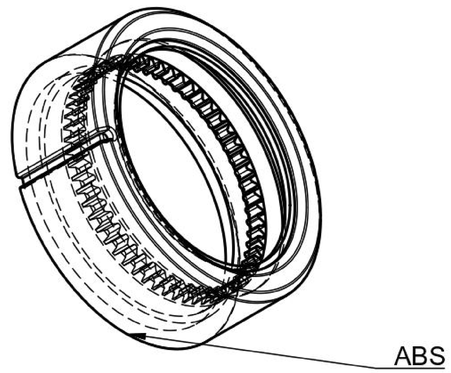

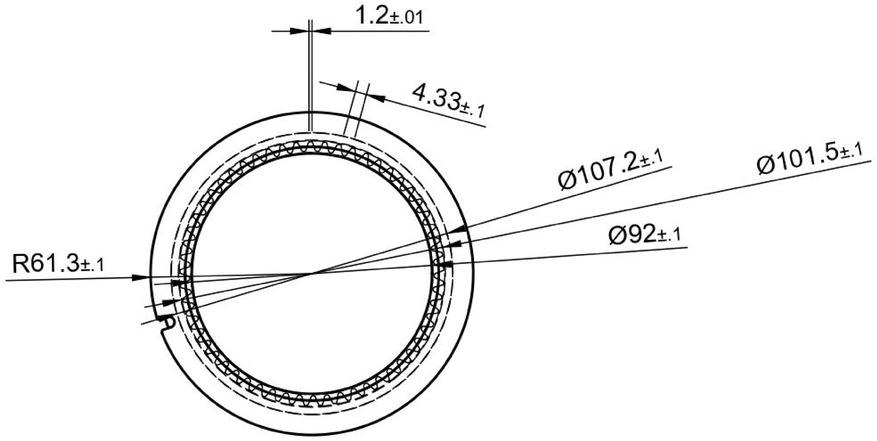

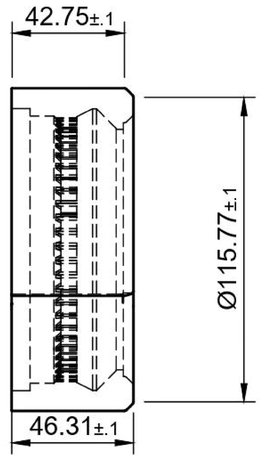

Dept.	Technical reference	Created by Jonathan Cheung 19/06/2024	Approved by
		Document type	Document status
		Title bevel	DWG No. 1
			Rev. / Date of issue / Sheet 1/3

Screen Cover Technical Drawing

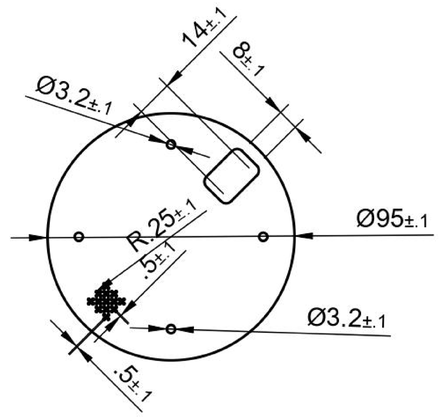

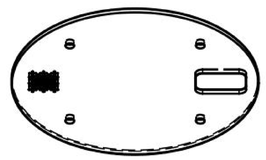

Dept.	Technical reference	Created by Jonathan Cheung 19/06/2024	Approved by
		Document type	Document status
		Title screen cover	DWG No. 2
			Rev. / Date of issue / Sheet 2/3

Bevel Technical Drawing

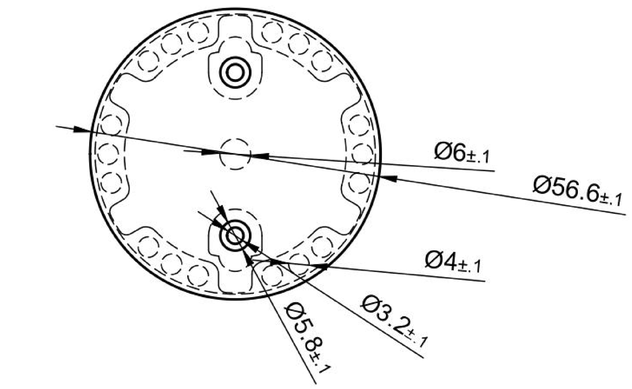

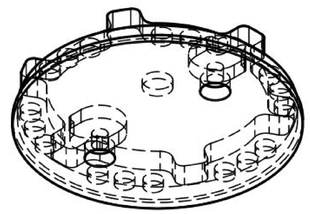

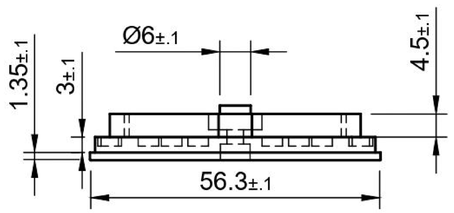

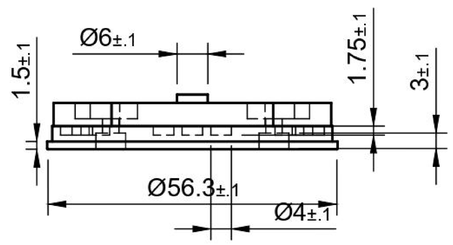

Dept.	Technical reference	Created by	Approved by
		Jonathan Cheung 19/06/2024	
		Document type	Document status
		Title	DWG No.
		button base	2
			Rev. / Date of issue / Sheet
			2/3

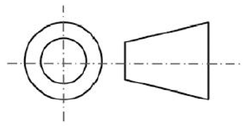

references

[1] https://todoist.com/productivity-methods/pomodoro-technique accessed 20/05/24.

[2] https://medium.com/@lakeplacidskater/does-the-pomodoro-method-work-for-creative-work-b77a1fd160dc 20/05/24 accessed 20/05/24.

[3] https://science.howstuffworks.com/life/inside-the-mind/human-brain/pomodoro-technique.htm accessed 20/05/24.

[4] https://worklouder.cc/ accessed 20/05/24.

[5] https://www.digikey.com/en/resources/conversion-calculators/conversion-calculator-battery-life accessed 20/05/24.

[6] https://www.gov.uk/government/news/information-about-the-uk-leaving-the-eu accessed 20/05/24.

[7] https://www.gov.uk/guidance/using-the-ukca-marking accessed 20/05/24.

[8] https://single-market-economy.ec.europa.eu/sectors/electrical-and-electronic-engineering-industries-eei/electromagnetic-compatibility-emc-directive_en accessed 20/05/24.

[9] https://single-market-economy.ec.europa.eu/sectors/electrical-and-electronic-engineering-industries-eei/radio-equipment-directive-red_en accessed 20/05/24.

[10] https://environment.ec.europa.eu/topics/waste-and-recycling/waste-electrical-and-electronic-equipment-weee_en accessed 20/05/24.