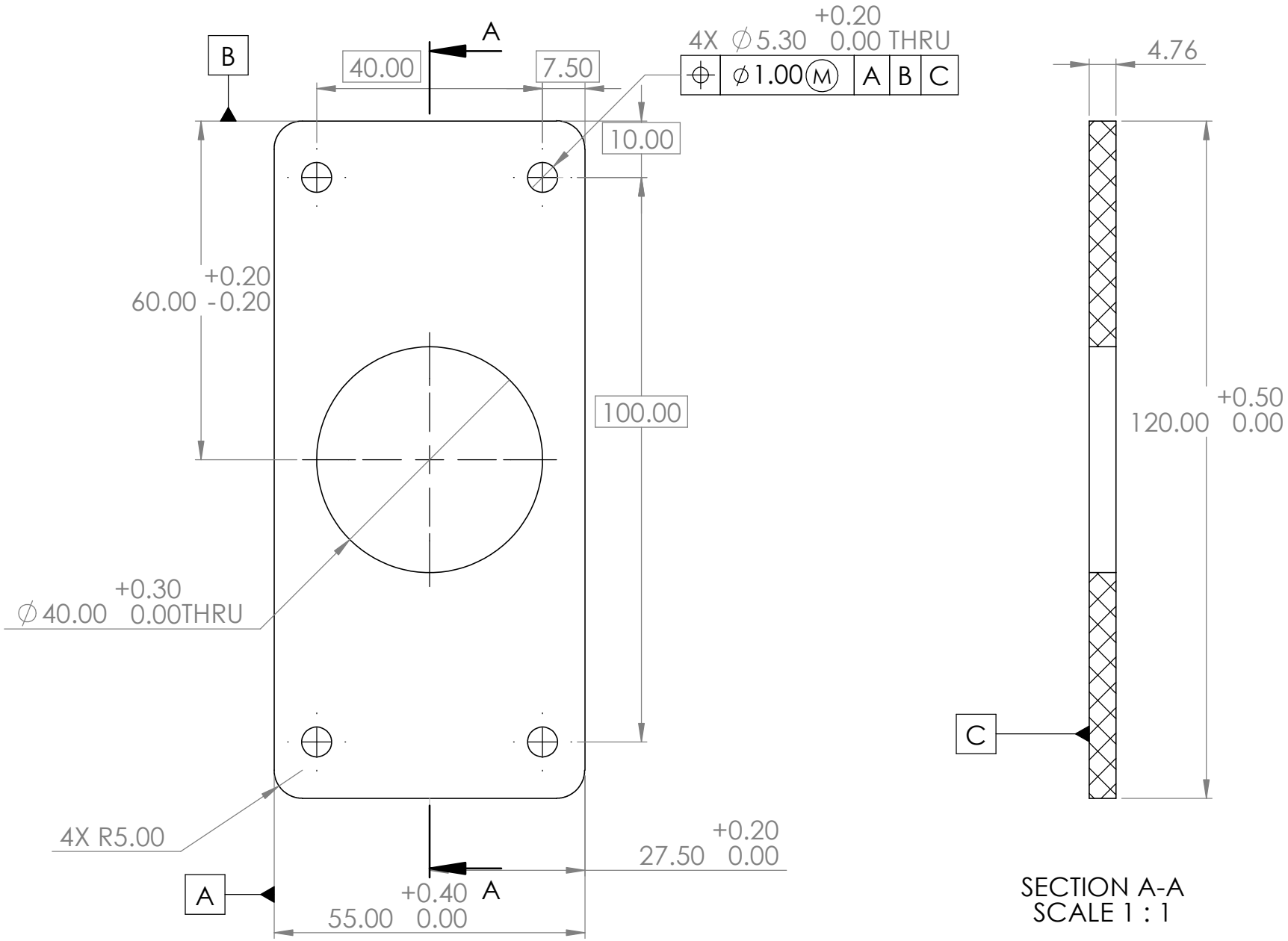

Concordia University	MATERIAL **ACRYLIC**	SURFACE ROUGHNESS √XX	TITLE **CAVITY UPPER 2 (4.76 MM)**	
	FINISH **CLEAR**	TOLERANCES .XX ± .50		
PROPRIETARY INFORMATION NOT TO BE RELEASED WITHOUT WRITTEN AUTHORIZATION FROM CONCORDIA UNIVERSITY	DESIGNER **TEAM 02**	ALL DIMENSIONS IN MILLIMETERS UNLESS OTHERWISE SPECIFIED	A SIZE	DATE **2023-12-01** USED ON **MECH 490**
	DRAFTER **TEAM 02**	APPROVED	SCALE **1:1**	SHEET **1 / 1** DWG NO. **232402-105** REV NO. **00**

SOLIDWORKS Educational Product. For Instructional Use Only.