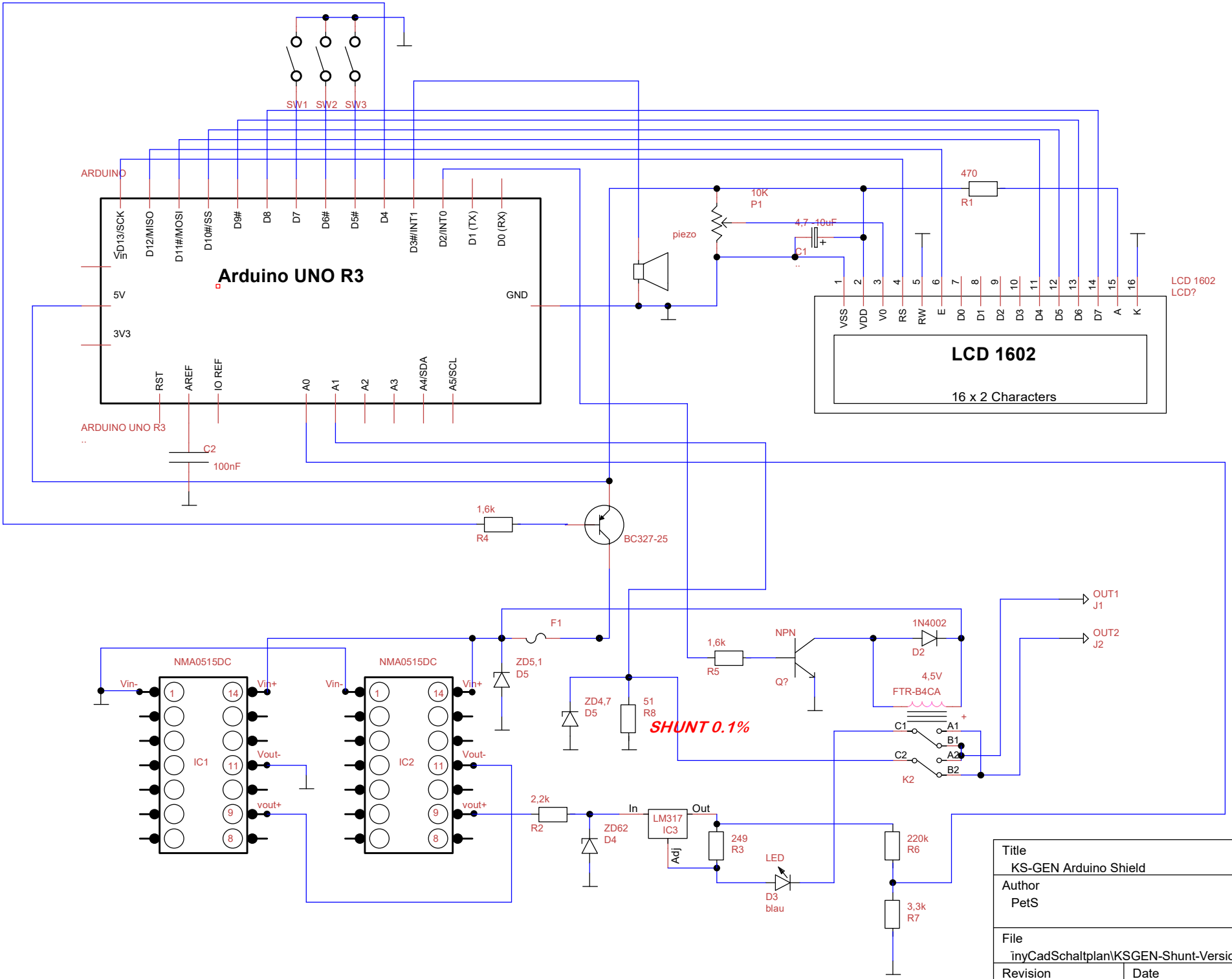

Title KS-GEN Arduino Shield		
Author PetS		
File inyCadSchaltplan\KSGEN-Shunt-Version_Patch1		Document
Revision 1.2	Date 16.05.2017	Sheets 1 of 1