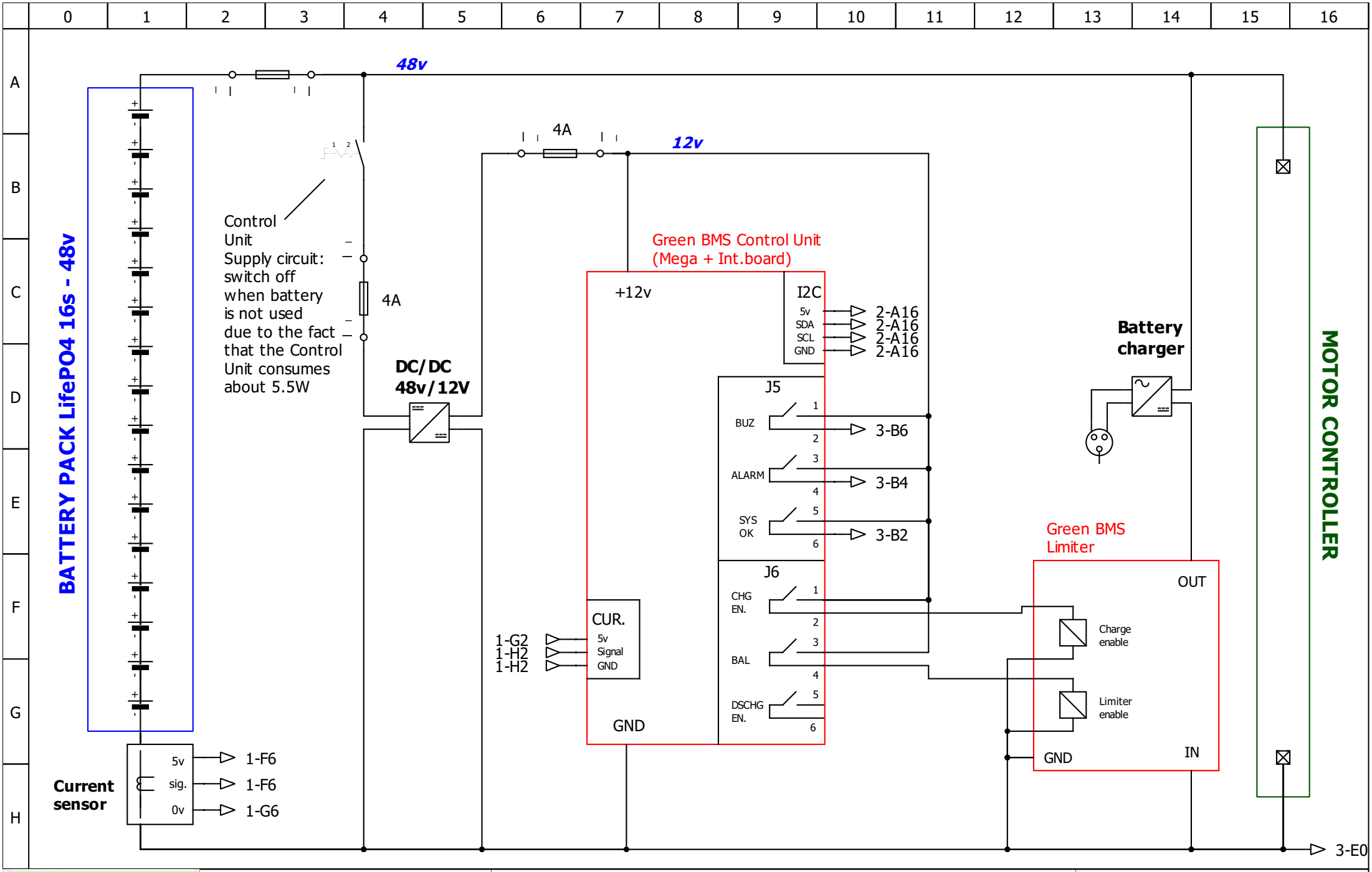

Green BMS	Autore : Sergio	Example of use - Power supplies	File :
	Data : 25/08/2021		Foglio : 1/4

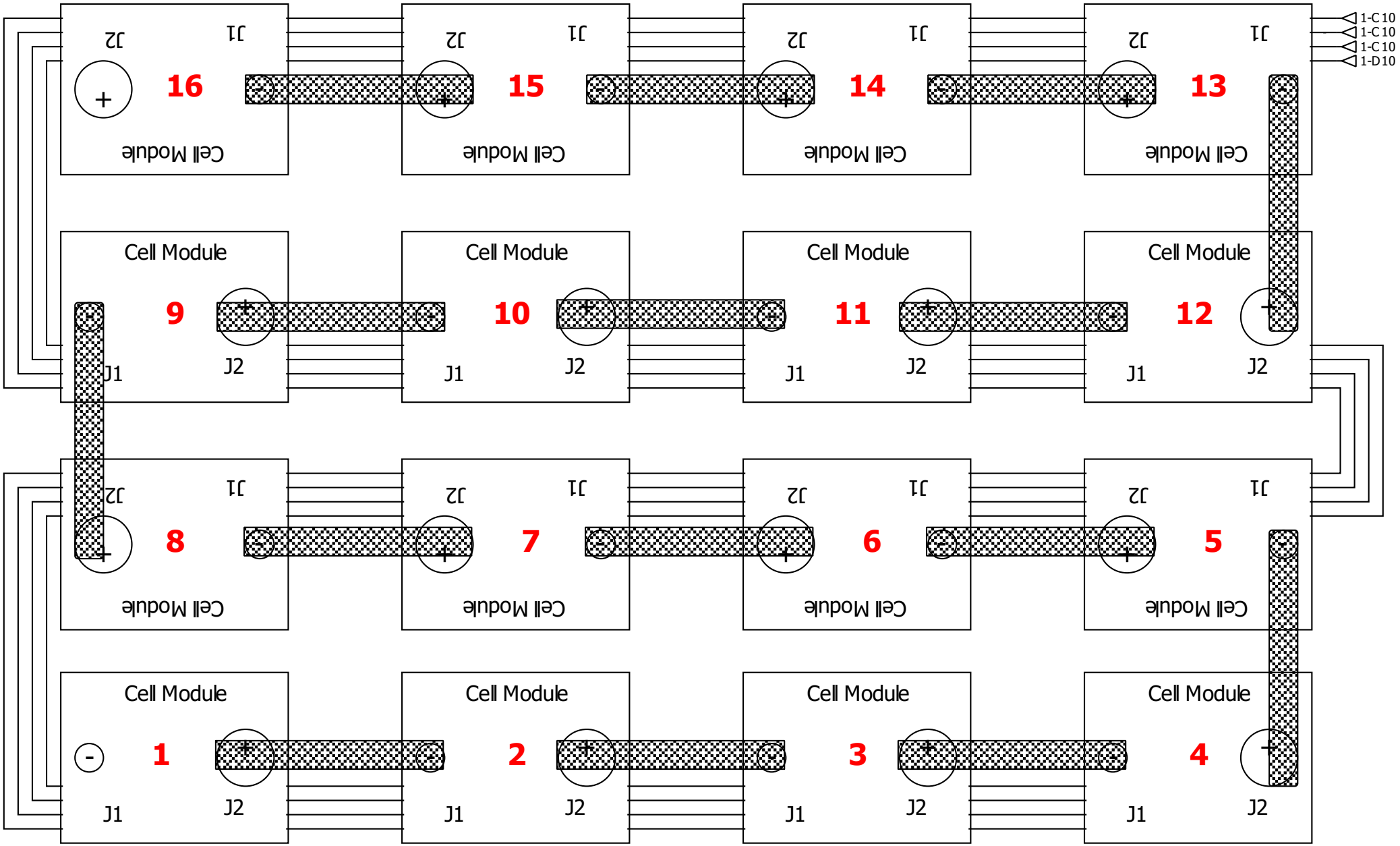

Green BMS	Autore : Sergio	Example of use - cell modules connection	File :
	Data : 25/08/2021		Foglio : 2/4

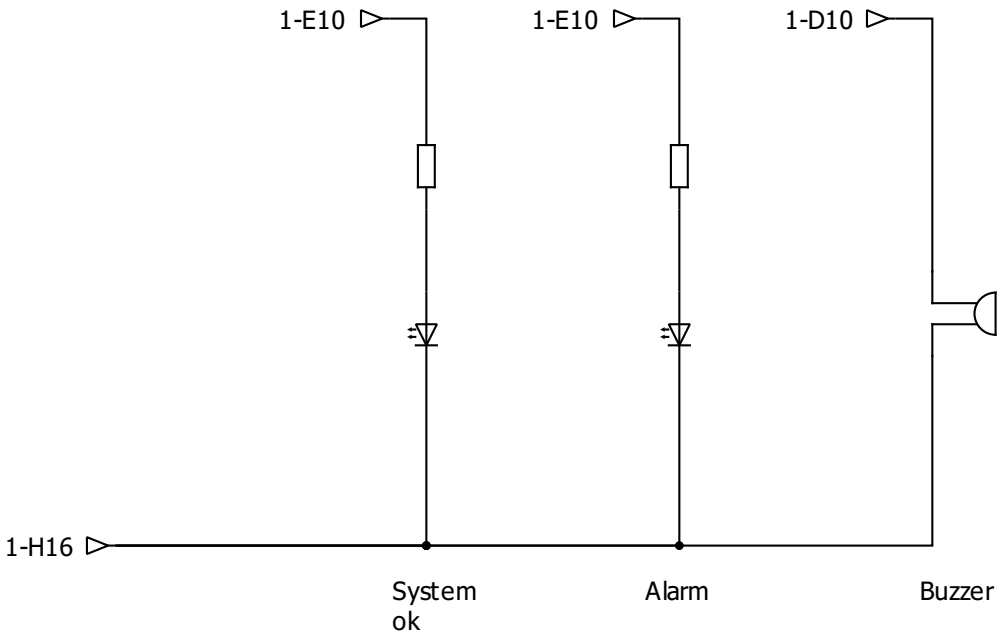

Green BMS	Autore : Sergio	Example of use - indications	File :
	Data : 25/08/2021		Foglio : 3/4

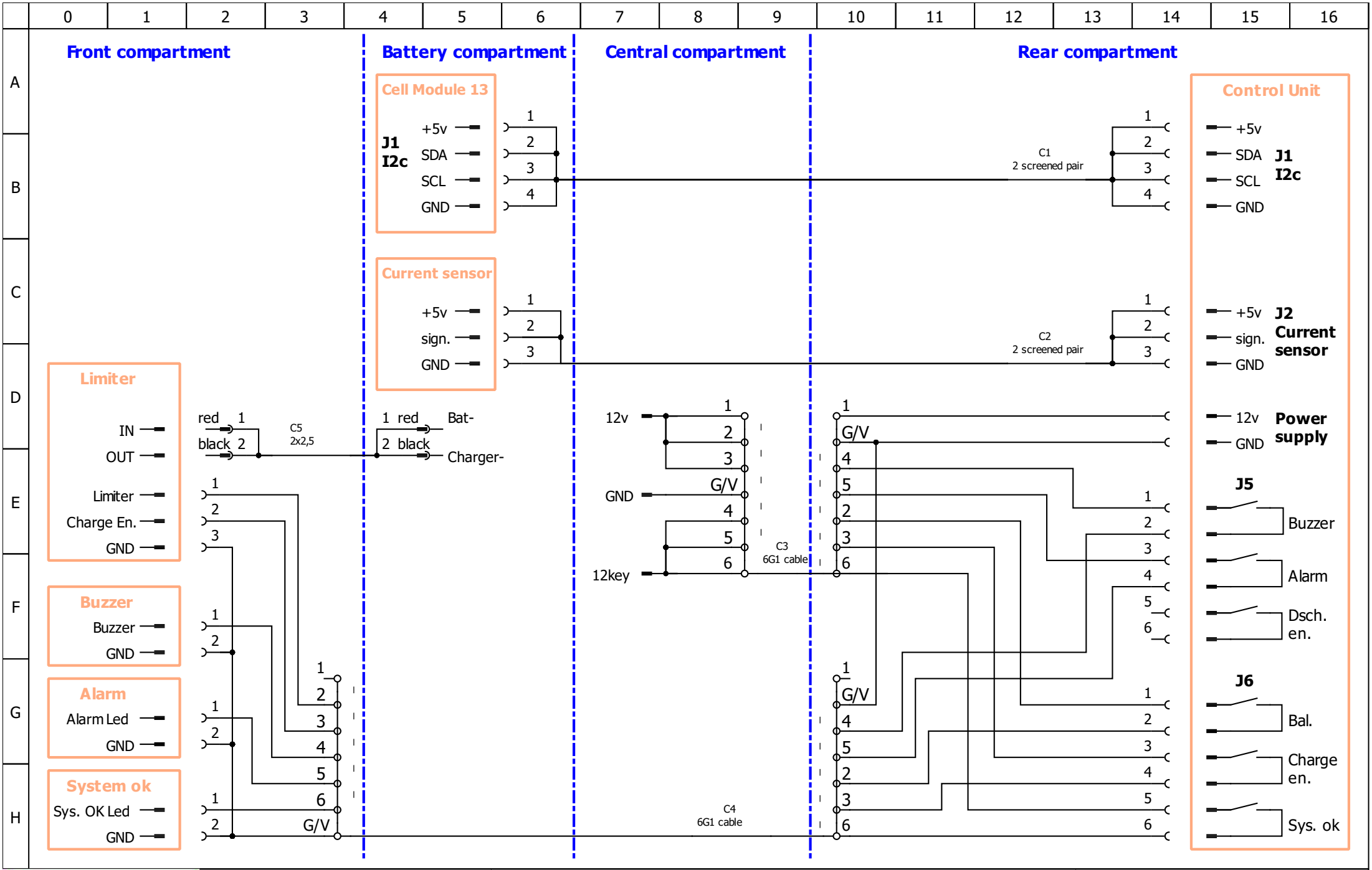

Green BMS	Autore : Sergio	Example of use - interconnection cables
	Data : 25/08/2021	File :
		Foglio : 4/4