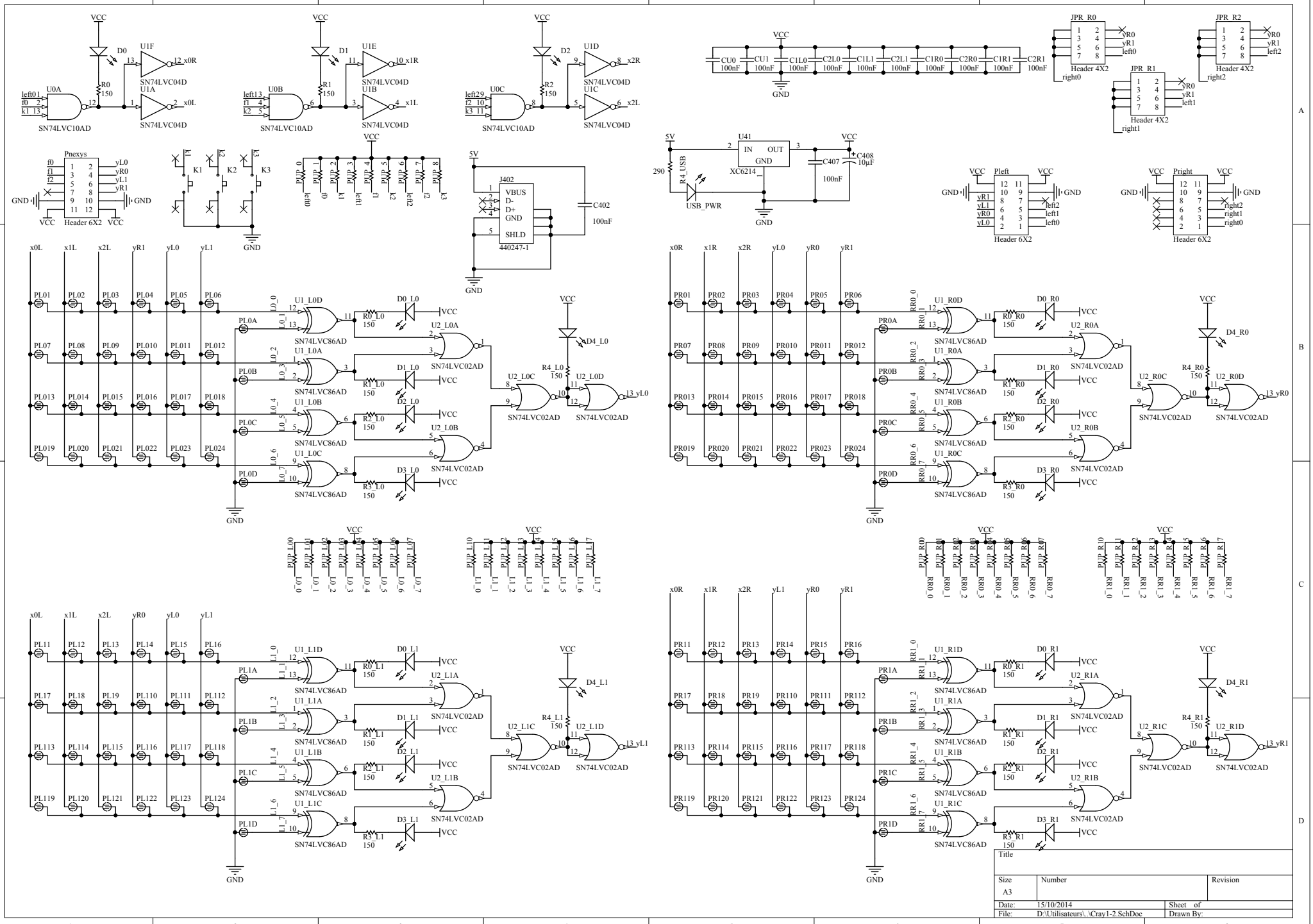
Title
Size A3
Number
Revision
Date: 15/10/2014
Sheet of
File: D:\Utilisateurs\..\Cray1-2.SchDoc
Drawn By:
SN74LVC10AD
SN74LVC04D
SN74LVC86AD
SN74LVC02AD
Header 4X2
Header 6X2
Pnexys
440247-1
XC6214
USB_PWR
VCC
GND