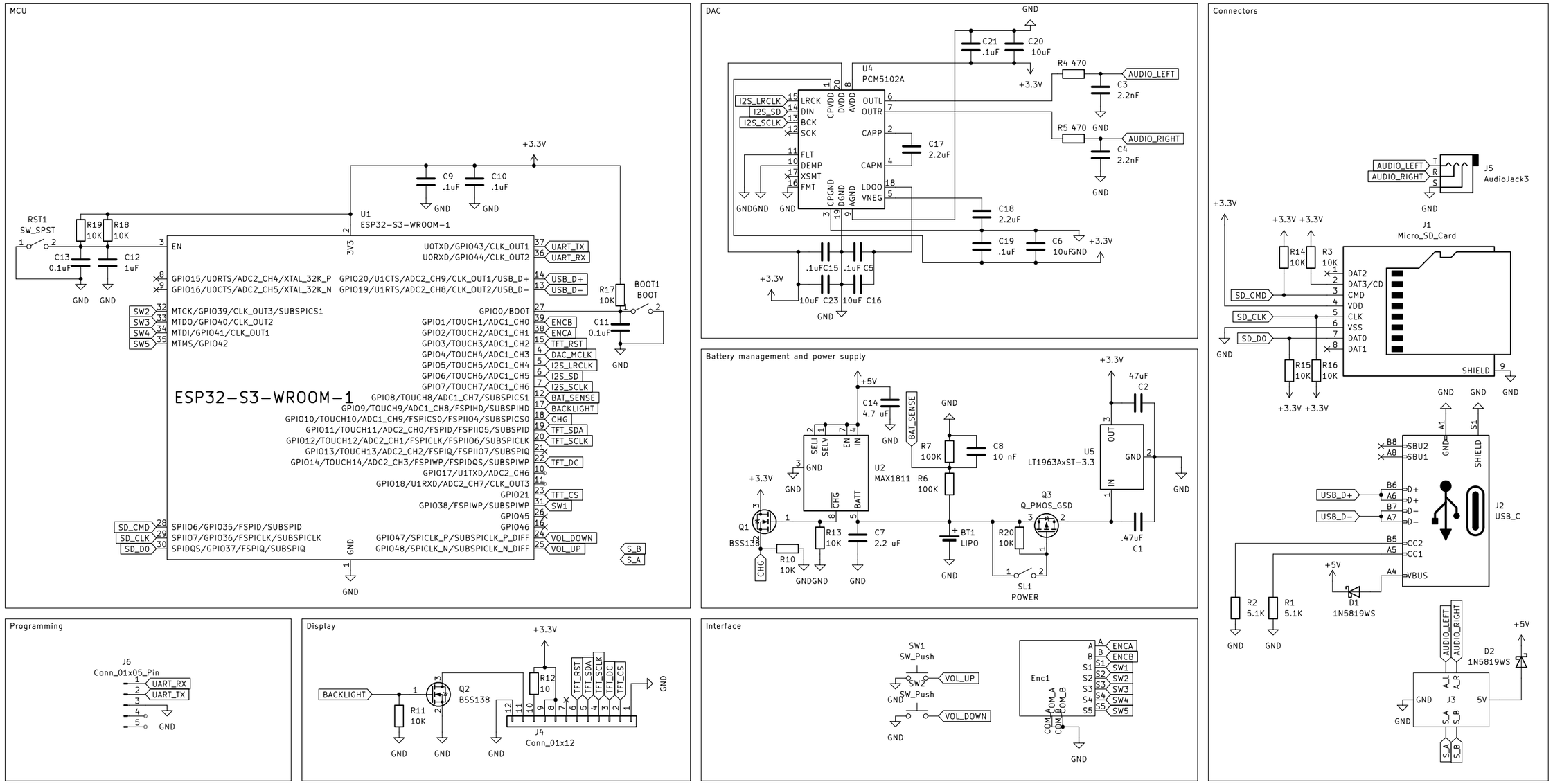

Sheet: /
File: JPL_MP3 circuitV2 - Copy.kicad_sch

Title:

Size: A3	Date:	Rev:
KiCad E.D.A. 8.0.6		Id: 1/1