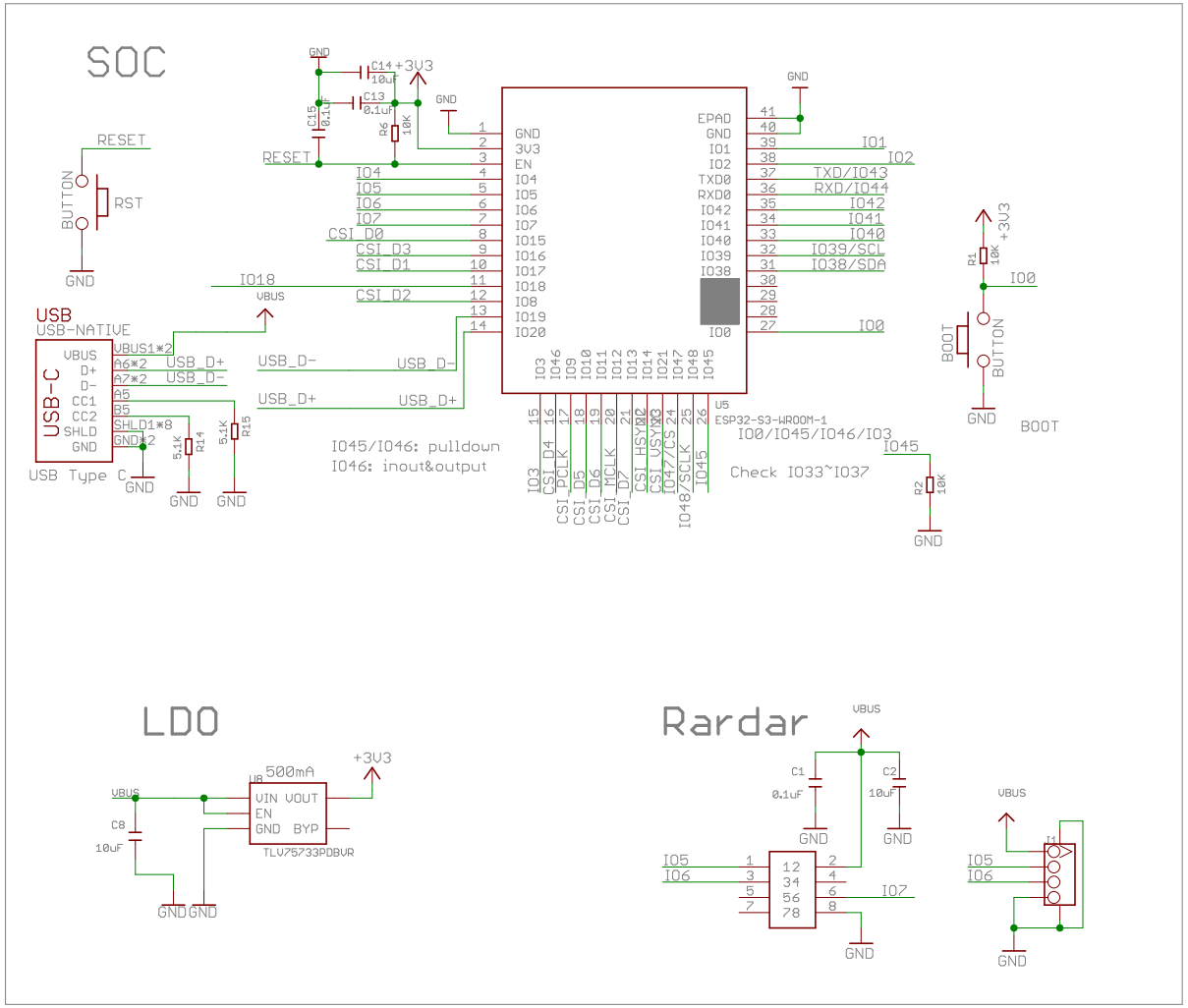
SOC
RESET
BUTTON
RST
GND
USB
USB-NATIVE
USB-C
USB Type C
VBUS
USB_D+
USB_D-
IO18
CSI_D0
CSI_D1
CSI_D2
CSI_D3
IO45/IO46: pulldown
IO46: inout&output
ESP32-S3-WROOM-1
IO0/IO45/IO46/IO3
Check IO33~IO37
BOOT
+3V3

LDO
500mA
VIN VOUT
EN
GND BYP
TLV75733PDBVR
VBUS
+3V3
GND

Rardar
VBUS
GND
IO5
IO6
IO7

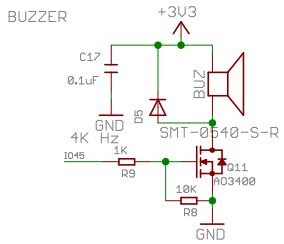
BUZZER
+3V3
4K Hz
SMT-0540-S-R
AO3400
GND

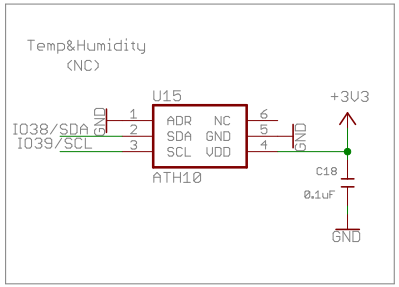
Temp&Humidity
(NC)
U15
ADR NC
SDA GND
SCL VDD
ATH10
IO38/SDA
IO39/SCL
+3V3
GND

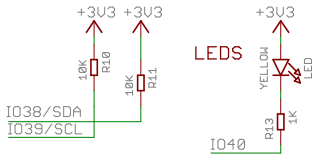
+3V3
IO38/SDA
IO39/SCL
LEDS
YELLOW
LED
IO40

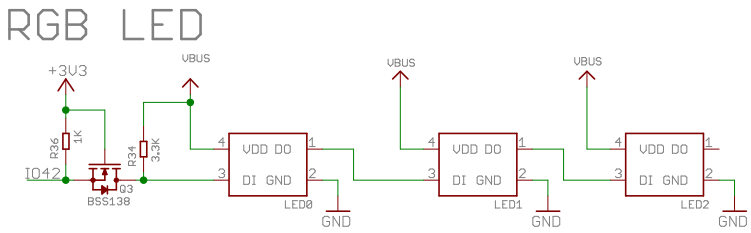
RGB LED
+3V3
VBUS
IO42
BSS138
VDD DO
DI GND
LED0
LED1
LED2
GND