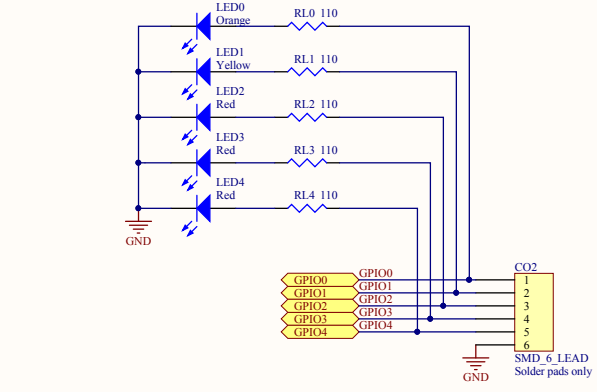

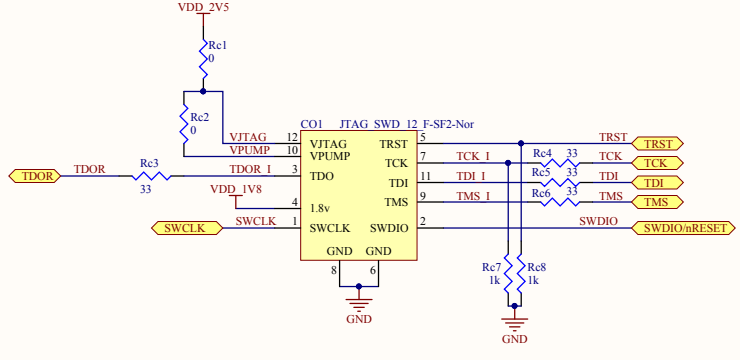

Title	SF2 IO & JTAG	
Size: A3	Number	Revision
Date: 4/30/2019	Sheet1 of	
File: P:\projects\...\Rikky-board_v0r0_CONN.SchDoc	Drawn By:	

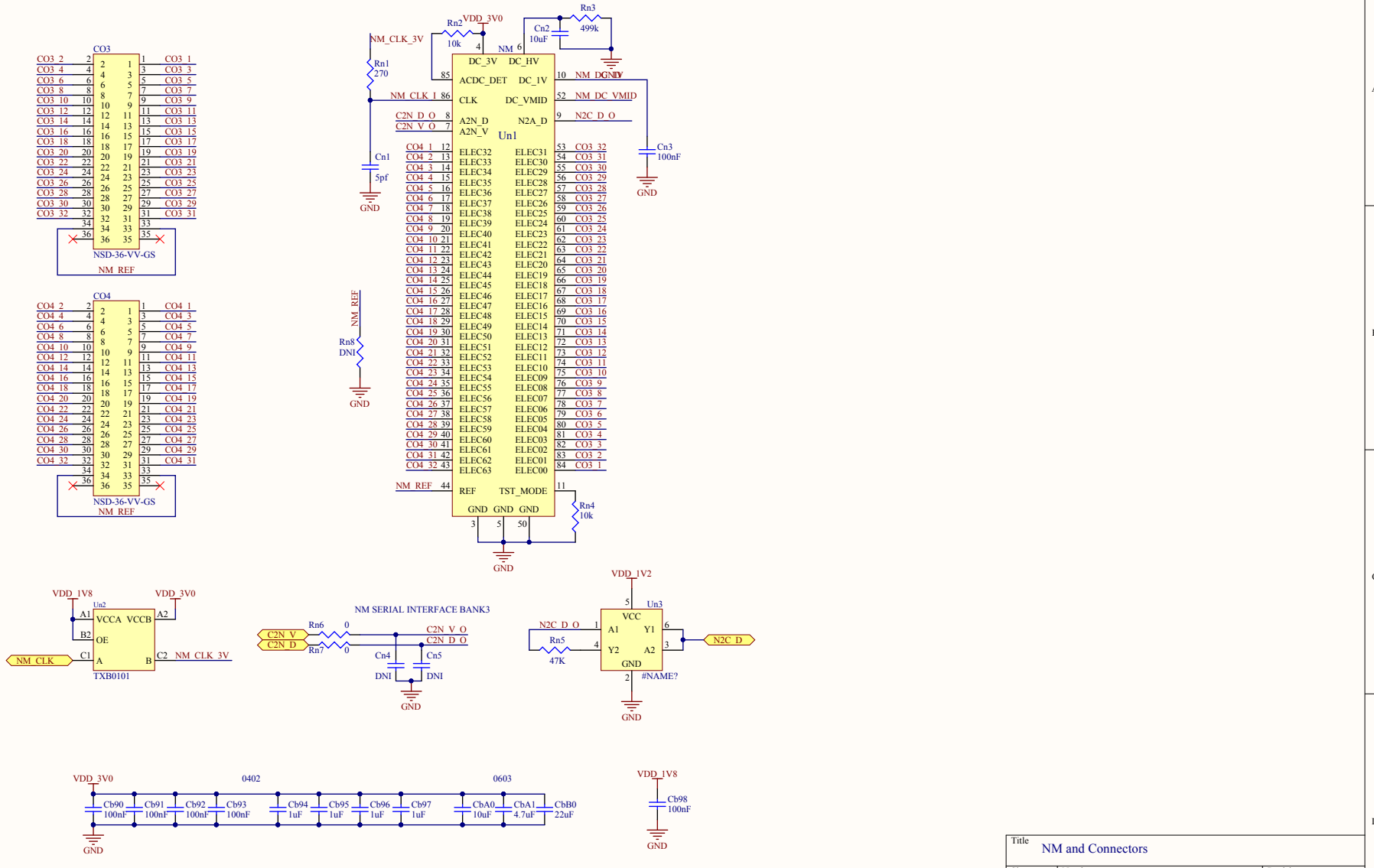

Title	NM and Connectors	
Size: B	Number:	Revision:
Date: 4/30/2019	Sheet of	
File: P:\projects\..\Rikky-board_v0r0_NM.SchDoc	Drawn By:	

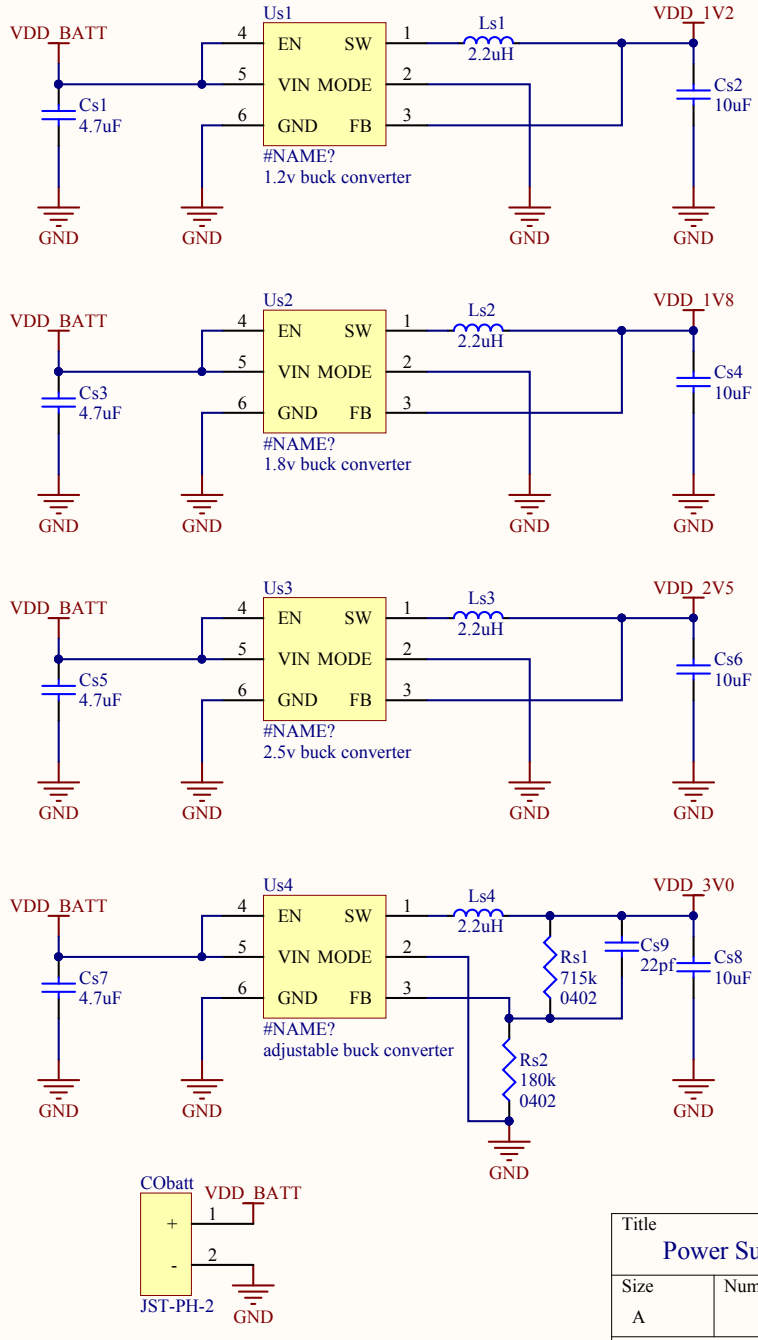

Title	Power Supplies		
Size	Number		Revision
A			
Date:	4/30/2019	Sheet7 of	
File:	P:\projects\..\Rikky-board_v0r0_POWER-SUPPLIES.SchDoc	Drawn By:	

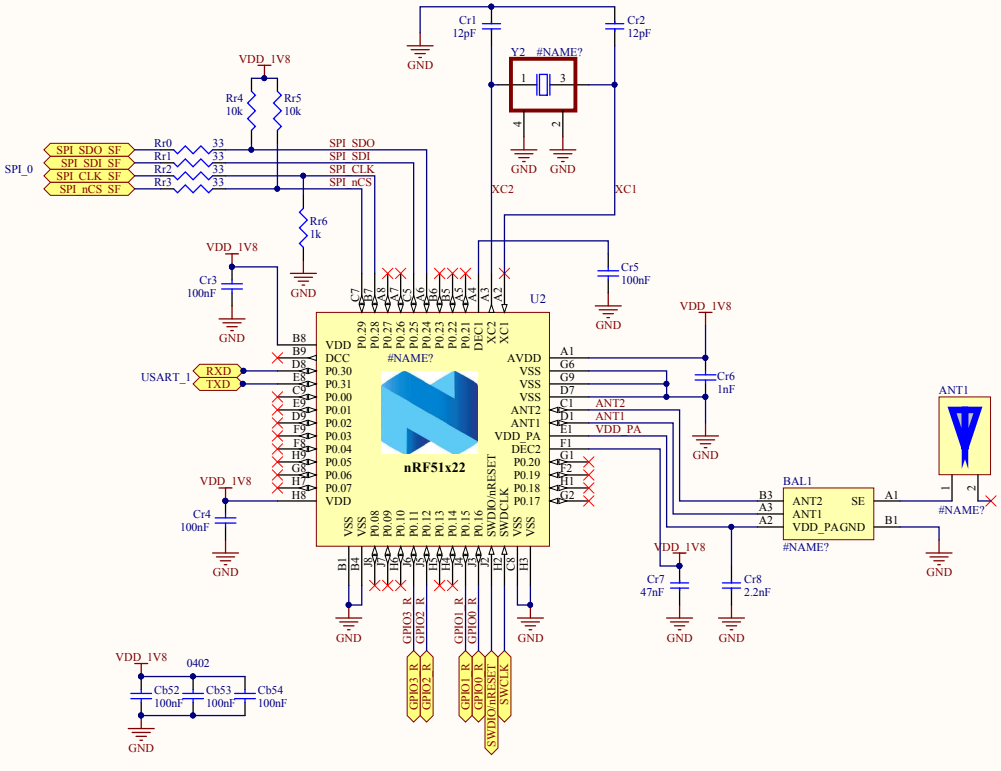

Title: RADIO		
Size: A3	Number:	Revision:
Date: 4/30/2019	Sheet 6 of	
File: P:\projects\...\Rikky-board_v0r0_RADIO.SchDoc	Drawn By:	

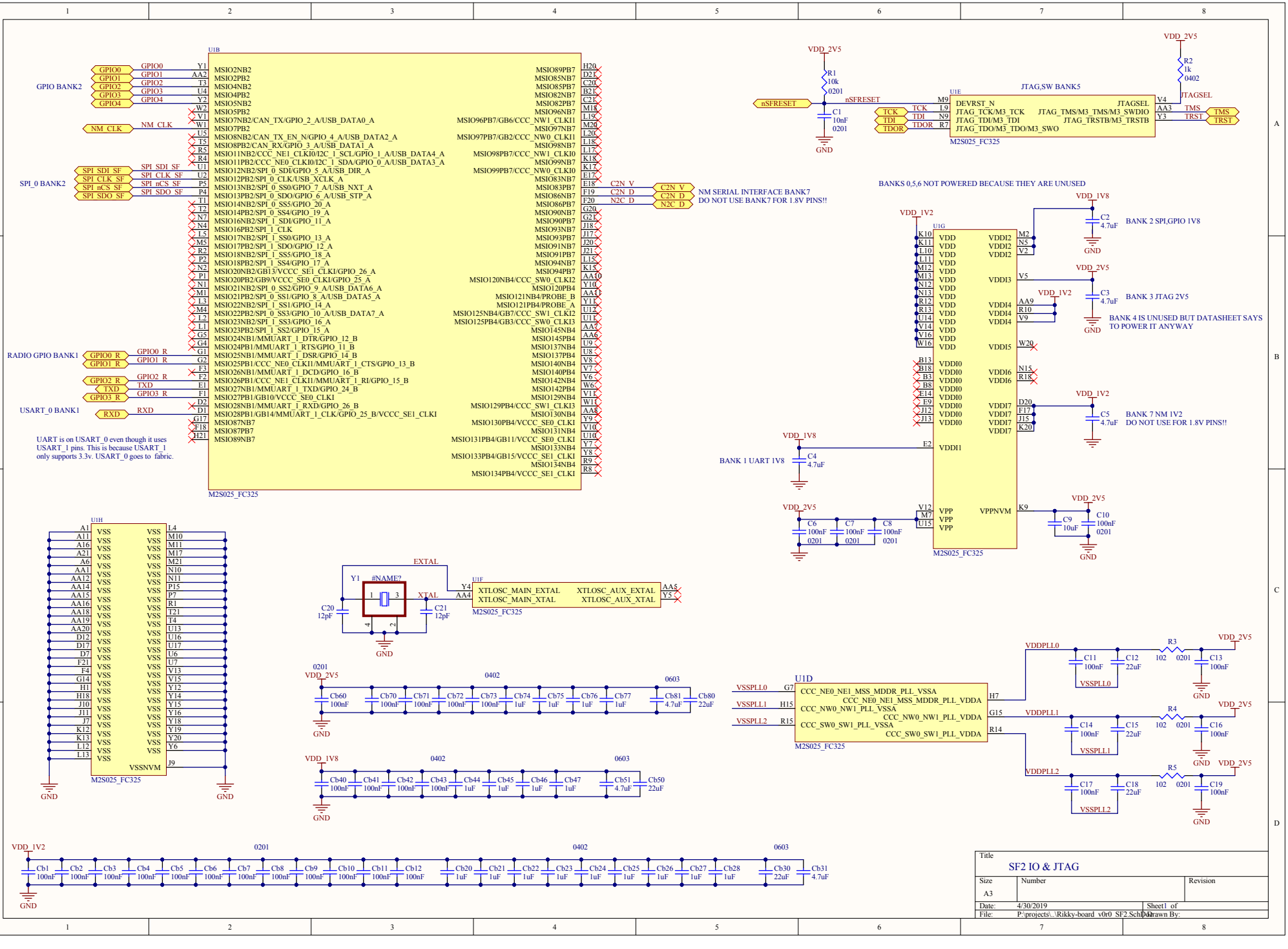
U1B
GPIO BANK2
GPIO0
GPIO1
GPIO2
GPIO3
GPIO4
NM_CLK
SPI_0 BANK2
SPI_SDI_SF
SPI_CLK_SF
SPI_nCS_SF
SPI_SDO_SF
RADIO GPIO BANK1
GPIO0_R
GPIO1_R
GPIO2_R
TXD
GPIO3_R
USART_0 BANK1
RXD
UART is on USART_0 even though it uses USART_1 pins. This is because USART_1 only supports 3.3v. USART_0 goes to fabric.
M2S025_FC325
C2N_V
C2N_D
N2C_D
NM SERIAL INTERFACE BANK7
DO NOT USE BANK7 FOR 1.8V PINS!!
VDD_2V5
R1
10k
0201
nSFRESET
C1
10nF
GND
U1E
JTAG,SW BANK5
DEVRST_N
JTAG_TCK/M3_TCK
JTAG_TDI/M3_TDI
JTAG_TDO/M3_TDO/M3_SWO
JTAG_TMS/M3_TMS/M3_SWDIO
JTAG_TRSTB/M3_TRSTB
TCK
TDI
TDOR
TMS
TRST
JTAGSEL
R2
1k
0402
BANKS 0,5,6 NOT POWERED BECAUSE THEY ARE UNUSED
U1G
VDD_1V2
VDD_1V8
C2
4.7uF
BANK 2 SPI,GPIO 1V8
C3
BANK 3 JTAG 2V5
BANK 4 IS UNUSED BUT DATASHEET SAYS TO POWER IT ANYWAY
C5
BANK 7 NM 1V2
DO NOT USE FOR 1.8V PINS!!
VDD
VDDI0
VDDI1
VPP
VPPNVM
BANK 1 UART 1V8
C4
C6
100nF
C7
C8
C9
10uF
C10
U1H
VSS
VSSNVM
EXTAL
XTAL
Y1
#NAME?
C20
12pF
C21
U1F
XTLOSC_MAIN_EXTAL
XTLOSC_MAIN_XTAL
XTLOSC_AUX_EXTAL
XTLOSC_AUX_XTAL
U1D
VSSPLL0
VSSPLL1
VSSPLL2
CCC_NE0_NE1_MSS_MDDR_PLL_VSSA
CCC_NE0_NE1_MSS_MDDR_PLL_VDDA
CCC_NW0_NW1_PLL_VSSA
CCC_NW0_NW1_PLL_VDDA
CCC_SW0_SW1_PLL_VSSA
CCC_SW0_SW1_PLL_VDDA
VDDPLL0
VDDPLL1
VDDPLL2
R3
102
R4
R5
0201
0402
0603
Cb60
Cb70
Cb71
Cb72
Cb73
Cb74
Cb75
Cb76
Cb77
Cb80
Cb81
Cb40
Cb41
Cb42
Cb43
Cb44
Cb45
Cb46
Cb47
Cb50
Cb51
Cb1
Cb2
Cb3
Cb4
Cb5
Cb6
Cb7
Cb8
Cb9
Cb10
Cb11
Cb12
Cb20
Cb21
Cb22
Cb23
Cb24
Cb25
Cb26
Cb27
Cb28
Cb30
Cb31
Title
SF2 IO & JTAG
Size
A3
Number
Revision
Date:
4/30/2019
Sheet1 of
File:
P:\projects\..\Rikky-board_v0r0_SF2.SchDoc
Drawn By:

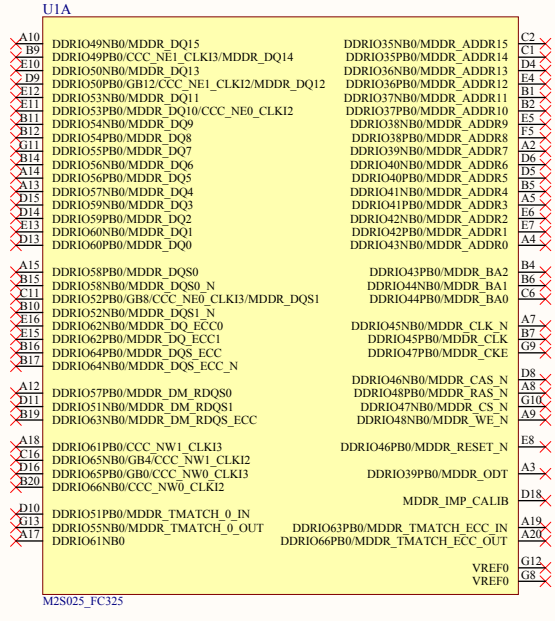

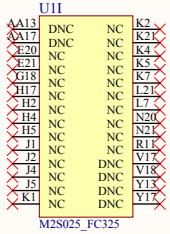

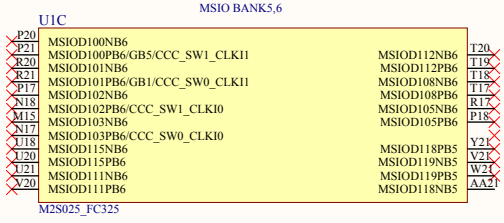

Title: SF2 Unused Blocks		
Size: B	Number:	Revision:
Date: 4/30/2019		Sheet5 of
File: P:\projects\..\Rikky-board_v0r0_SF2_unused.SchDoc		

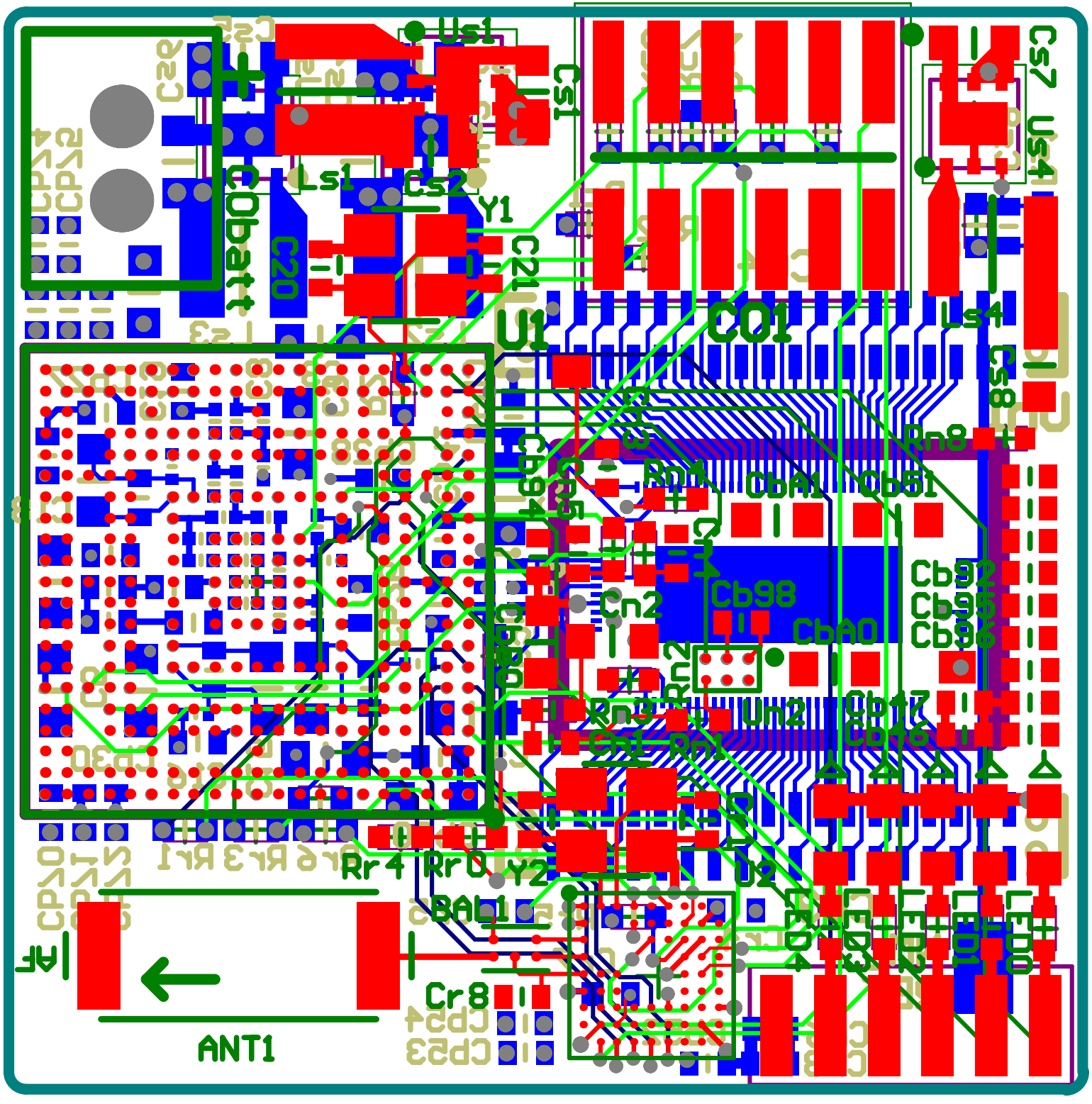

Us1
Cs1
Cs7
Us4
Ls1
Cs2
Y1
C20
C21
U1
CO1
Ls4
Cs8
Rn8
Rn1
CbA1
Cb51
Cn2
Cb98
CbA0
Cb92
Cb95
Cb96
Rn2
Rn3
Cb47
Cb46
Rr4
Rr0
Y2
BAL1
U2
Cr8
ANT1

Bill of Materials

<Parameter Title not found>

Source Data From: Rikky-board_v0r0.PrjPcb
Project: Rikky-board_v0r0.PrjPcb
Variant: None

Creation Date: 4/30/2019 11:32:09 AM
Print Date: 43585 43585.48074

Footprint	Comment	LibRef	Designator	Description	Quantity
ANTENNACHIP	#NAME?	Linx ANT-2.45-CHP-x	ANT1	ANT 2.4GHZ 802.11 BLUETOOTH SMD	1
BALUN_PACKAGE	#NAME?	BAL_NRF02D3	BAL1	BALUN 2.4GHZ	1
CONN_12-CLP	JTAG_SWD_12_F-SF2-Nor	JTAG_SWD_12_F-SF2-Nor	CO1	12 pin female JTAG/SWD header for SmartFusion2 and Nordic	1
LED-0603	#NAME?	LED	LED0	LED ORANGE CLEAR 0603 SMD	1
LED-0603	#NAME?	LED	LED1	LED YELLOW CLEAR 0603 SMD	1
MCSM-CS-325	M2S025_FC325	M2S025_FC325	U1	SmartFusion2	1
BGA_NORDIC	#NAME?	nRF51822	U2	IC SOC 2.4GHZ MULTIPROTO 62WLCS	1
YZP6-ti	TXB0101	TXB0101	Un2	IC VOLT-LEVEL TRANSLATOR 6-DSBGA	1
6micropak	#NAME?	Dual Inverter	Un3	IC INVERTER ULP-A DUAL 6MICROPAK	1
TPS_PACKAGE_novia	#NAME?	TPS62262	Us1	IC REG BUCK 1.2V 0.6A SYNC 6SON	1
TPS_PACKAGE_novia	#NAME?	TPS62261	Us2	IC REG BUCK 1.8V 0.6A SYNC 6SON	1
TPS_PACKAGE_novia	#NAME?	TPS62263	Us3	IC REG BUCK 2.5V 0.6A SYNC 6SON	1
TPS_PACKAGE_novia	#NAME?	TPS62260DRVR	Us4	IC REG BUCK ADJ 0.6A SYNC 6SON	1
XOSC_4PIN	#NAME?	XOSC	Y1	Crystal 20MHz ±10ppm 10pF 70 Ohm -10°C ~ 60°C Surface Mount 4-SMD, No Lead DFN LCC	1
XOSC_4PIN	#NAME?	XOSC	Y2	16MHz ±10ppm Crystal 10pF 80 Ohm -10°C ~ 60°C Surface Mount 4-SMD, No Lead DFN LCC	1
NSD-36-VV-GS	NSD-36-VV-GS	NSD-36-VV-GS	CO3, CO4	Omnetics connector, 36 pin female	2
0402_p	#NAME?	Resistor	Rc1, Rc2, Rn6, Rn7	RES SMD 0.0OHM JUMPER 1/10W 0402	4
PWD_CON_6, JST-PH-2-TE-TH, LED-0603, LED-0603, LED-0603, 0402_p, NMv2	SMD_6_LEAD, JST-PH-2, #NAME?, #NAME?, #NAME?, #NAME?, NM	SMD_6_LEAD, JST-PH-2, LED, LED, LED, Resistor, NM	CO2, CObatt, LED2, LED3, LED4, R2, Un1	[NoValue], [NoValue], LED YELLOW CLEAR 0603 SMD, LED YELLOW CLEAR 0603 SMD, LED YELLOW CLEAR 0603 SMD, RES SMD 1K OHM 1% 1/20W 0201, Neuromodulator	7
0402_p	#NAME?	Resistor	Rc7, Rc8, Rr6	RES SMD 1K OHM 1% 1/10W 0402	3
c0402-Murata-GR	#NAME?	Cap	Cr6	CAP CER 1000PF 50V X5R 0402	1
c0402-Murata-GR	#NAME?	Cap	Cb20, Cb21, Cb22, Cb23, Cb24, Cb25, Cb26, Cb27, Cb28, Cb44, Cb45, Cb46, Cb47, Cb74, Cb75, Cb76, Cb77, Cb94, Cb95, Cb96, Cb97	CAP CER 1UF 25V X5R 0402, CAP CER 1UF 25V X5R 0402, CAP CER 1UF 25V X5R 0402, CAP CER 1UF 25V X5R 0402, CAP CER 1UF 25V X5R 0402, CAP CER 1UF 25V X5R 0402, CAP CER 1UF 25V X5R 0402, CAP CER 1UF 25V X5R 0402, CAP CER 1UF 25V X5R 0	21
c0402-Murata-GR			Cr8	CAP CER 2200PF 50V X5R 0402	1
LEAD_REGULATOR		LEAD_REGUALTOR	Ls1, Ls2, Ls3, Ls4	FIXED IND 2.2UH 1A 120 MOHM SMD	4
c0603-Murata-GR	#NAME?	Cap	C2, C3, C4, C5, Cb31, Cb51, Cb81, CbA1, Cs1, Cs3, Cs5, Cs7	CAP CER 4.7UF 25V X6S 0603	12
c0402-Murata-GR	#NAME?	Cap	Cn1	CAP CER 5PF 50V NP0 0402 +-0.1pf	1
0201_p	#NAME?	Resistor	R1	RES SMD 10K OHM 1% 1/20W 0201	1
0402_p	#NAME?	Resistor	Rn2, Rn4, Rr4, Rr5	RES SMD 10K OHM 1% 1/10W 0402	4
c0201-Murata-GR	0201	Cap	C1	CAP CER 10000PF 25V X5R 0201	1
c0603-Murata-GR	#NAME?	Cap	C9, CbA0, Cn2, Cs2, Cs4, Cs6, Cs8	CAP CER 10UF 25V X5R 0603	7
c0402-Murata-GR	#NAME?		C20, C21, Cr1, Cr2	CAP CER 12PF 50V NP0 0402	4
c0402-Murata-GR	#NAME?	Cap	Cs9	CAP CER 22PF 50V NP0 0402	1
c0603-Murata-GR	#NAME?	Cap	C12, C15, C18, Cb30, Cb50, Cb80, CbB0	CAP CER 22UF 10V X5R 0603	7
0402_p	#NAME?	Resistor	Rc3, Rc4, Rc5, Rc6, Rr0, Rr1, Rr2, Rr3	RES SMD 33 OHM 1% 1/10W 0402	8
0402_p	#NAME?	Resistor	Rn5	RES SMD 47K OHM 1% 1/10W 0402	1
c0402-Murata-GR	#NAME?		Cr7	CAP CER 0.047UF 50V X7S 0402	1
c0201-Murata-GR	#NAME?	Cap	C6, C7, C8, C10, Cb1, Cb2, Cb3, Cb4, Cb5, Cb6, Cb7, Cb8, Cb9, Cb10, Cb11, Cb12, Cb60	CAP CER 0.1UF 16V X7S 0201	17
c0402-Murata-GR	#NAME?	Cap	C11, C13, C14, C16, C17, C19, Cb40, Cb41, Cb42, Cb43, Cb52, Cb53, Cb54, Cb70, Cb71, Cb72, Cb73, Cb90, Cb91, Cb92, Cb93, Cb98, Cn3, Cr3, Cr4, Cr5	CAP CER 0.1UF 16V X7R 0402	26
0201_p	#NAME?	Resistor	R3, R4, R5	RES SMD 102 OHM 1% 1/20W 0201	3
0402_p	#NAME?	Resistor	RL0, RL1, RL2, RL3, RL4	RES SMD 110 OHM 1% 1/10W 0402	5
0402_p	#NAME?	Resistor	Rs2	RES SMD 180K OHM 1% 1/20W 0201	1
0402_p	#NAME?	Resistor	Rn1	RES SMD 270 OHM 1% 1/10W 0402	1
0402_p	#NAME?	Resistor	Rn3	RES SMD 499K OHM 1% 1/10W 0402	1
0402_p	#NAME?	Resistor	Rs1	RES SMD 715K OHM 1% 1/20W 0201	1
c0402-Murata-GR, c0402-Murata-GR, 0402_p	#NAME?	Cap, Cap, Resistor	Cn4, Cn5, Rn8	Capacitor, Capacitor, Resistor	3
					164

Approved **Notes**