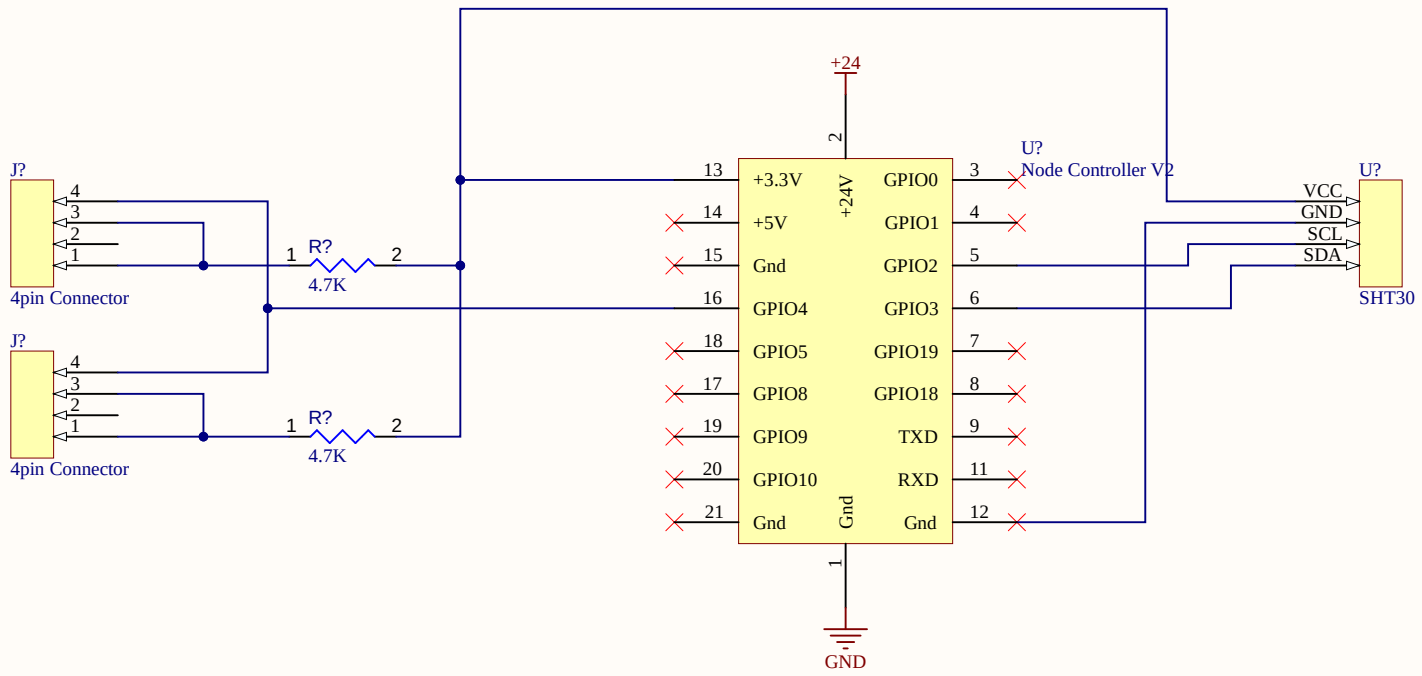

Title		
Size A	Number	Revision
Date: 12/08/2024	Sheet of	
File: C:\Users\..\Temperature and Humidity.SchDoc	Drawn By:	