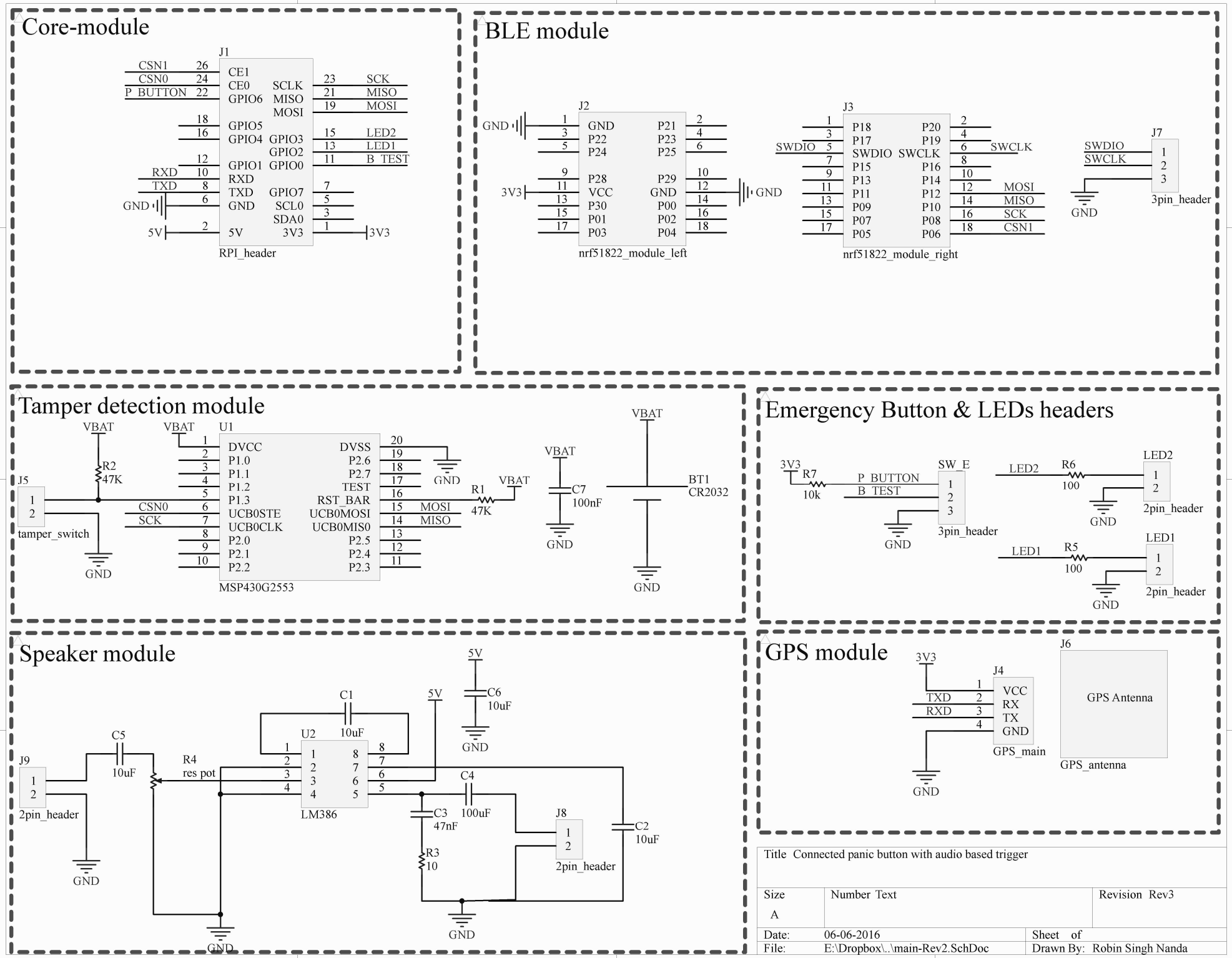
Core-module
J1
CSN1 26
CSN0 24
P_BUTTON 22
CE1
CE0
GPIO6
SCLK 23 SCK
MISO 21 MISO
MOSI 19 MOSI
18 GPIO5
16 GPIO4
GPIO3 15 LED2
GPIO2 13 LED1
12 GPIO1
GPIO0 11 B_TEST
RXD 10 RXD
TXD 8 TXD
GND 6 GND
GPIO7 7
SCL0 5
SDA0 3
5V 2 5V
3V3 1 3V3
RPI_header
BLE module
J2
GND 1 GND
3 P22
5 P24
9 P28
3V3 11 VCC
13 P30
15 P01
17 P03
P21 2
P23 4
P25 6
P29 10
GND 12 GND
P00 14
P02 16
P04 18
nrf51822_module_left
J3
1 P18
3 P17
SWDIO 5 SWDIO
7 P15
9 P13
11 P11
13 P09
15 P07
17 P05
P20 2
P19 4
SWCLK 6 SWCLK
P16 8
P14 10
P12 12 MOSI
P10 14 MISO
P08 16 SCK
P06 18 CSN1
nrf51822_module_right
J7
SWDIO
SWCLK
1
2
3
GND
3pin_header
Tamper detection module
VBAT
VBAT
U1
R2
47K
J5
1
2
tamper_switch
GND
1 DVCC
2 P1.0
3 P1.1
4 P1.2
5 P1.3
CSN0 6 UCB0STE
SCK 7 UCB0CLK
8 P2.0
9 P2.1
10 P2.2
DVSS 20
P2.6 19
P2.7 18
TEST 17
RST_BAR 16
UCB0MOSI 15 MOSI
UCB0MIS0 14 MISO
P2.5 13
P2.4 12
P2.3 11
MSP430G2553
GND
R1
47K
VBAT
VBAT
C7
100nF
GND
VBAT
BT1
CR2032
GND
Emergency Button & LEDs headers
3V3
R7
10k
P_BUTTON
B_TEST
SW_E
1
2
3
3pin_header
GND
LED2
R6
100
LED2
1
2
2pin_header
GND
LED1
R5
100
LED1
1
2
2pin_header
GND
Speaker module
5V
C6
10uF
GND
C1
10uF
5V
U2
C5
10uF
J9
1
2
2pin_header
GND
R4
res pot
1 1
2 2
3 3
4 4
8 8
7 7
6 6
5 5
LM386
C4
100uF
C3
47nF
R3
10
J8
1
2
2pin_header
C2
10uF
GND
GND
GPS module
3V3
J4
1 VCC
TXD 2 RX
RXD 3 TX
4 GND
GPS_main
GND
J6
GPS Antenna
GPS_antenna
Title Connected panic button with audio based trigger
Size A
Number Text
Revision Rev3
Date: 06-06-2016
Sheet of
File: E:\Dropbox\..\main-Rev2.SchDoc
Drawn By: Robin Singh Nanda