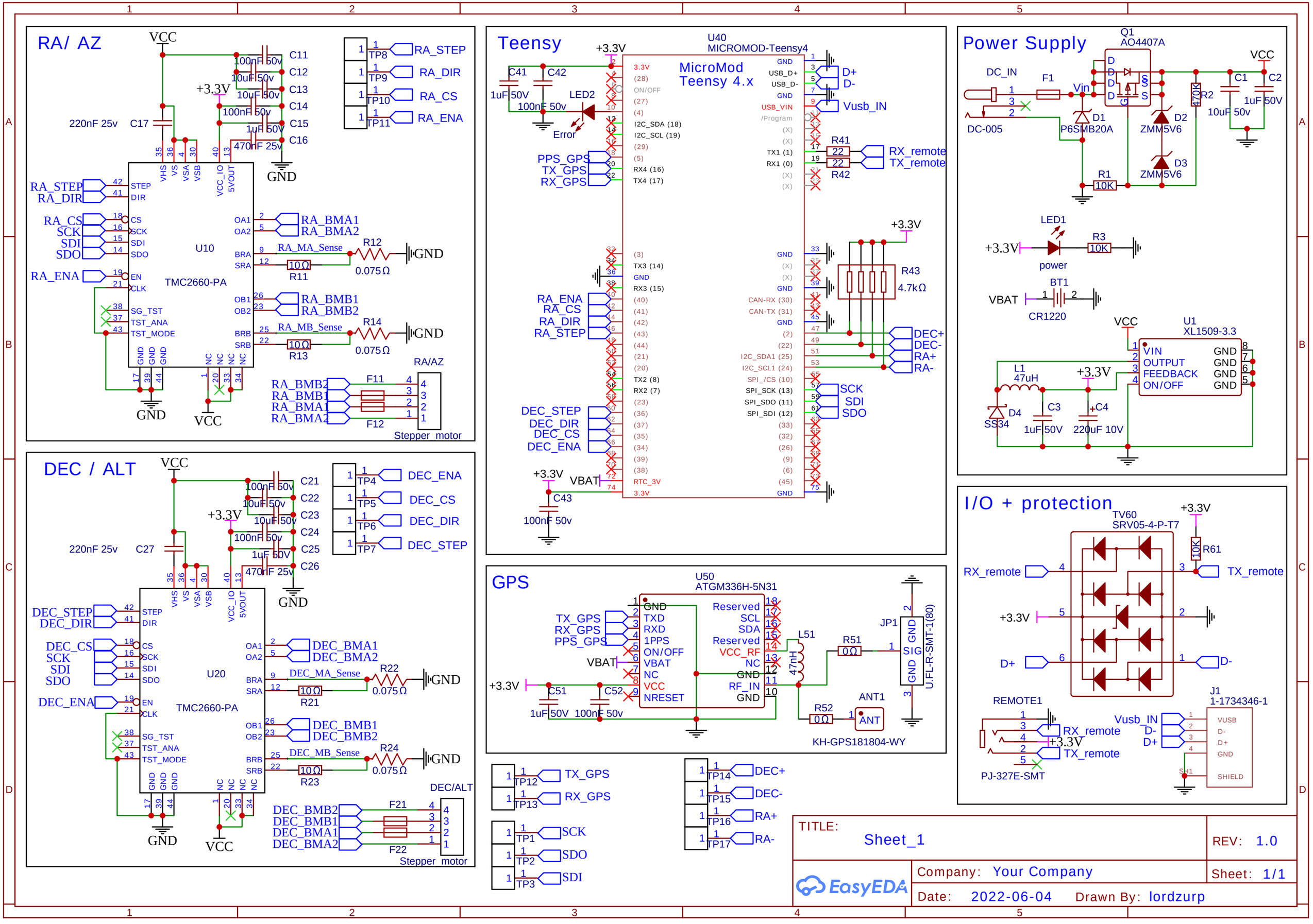
RA/ AZ
U10
TMC2660-PA
RA_STEP
RA_DIR
RA_CS
SCK
SDI
SDO
RA_ENA
RA_BMA1
RA_BMA2
RA_BMB1
RA_BMB2
RA_MA_Sense
RA_MB_Sense
R11
R12
R13
R14
0.075Ω
RA/AZ
Stepper motor
DEC / ALT
U20
DEC_STEP
DEC_DIR
DEC_CS
DEC_ENA
DEC_BMA1
DEC_BMA2
DEC_BMB1
DEC_BMB2
DEC_MA_Sense
DEC_MB_Sense
R21
R22
R23
R24
DEC/ALT
Teensy
U40
MICROMOD-Teensy4
MicroMod Teensy 4.x
PPS_GPS
TX_GPS
RX_GPS
Error
LED2
Vusb_IN
RX_remote
TX_remote
R41
R42
R43
4.7kΩ
DEC+
DEC-
RA+
RA-
SCK
SDI
SDO
VBAT
C43
GPS
U50
ATGM336H-5N31
L51
47nH
R51
R52
ANT1
JP1
U.FL-R-SMT-1(80)
KH-GPS181804-WY
Power Supply
Q1
AO4407A
DC_IN
DC-005
F1
D1
P6SMB20A
D2
ZMM5V6
D3
ZMM5V6
R1
10K
R2
470K
C1
C2
1uF 50V
10uF 50V
LED1
power
R3
BT1
CR1220
U1
XL1509-3.3
VIN
OUTPUT
FEEDBACK
ON/OFF
L1
47uH
D4
SS34
C3
C4
220uF 10V
I/O + protection
TV60
SRV05-4-P-T7
R61
REMOTE1
PJ-327E-SMT
J1
1-1734346-1
Vusb_IN
TX_GPS
RX_GPS
SCK
SDO
SDI
DEC+
DEC-
RA+
RA-
TITLE:
Sheet_1
REV: 1.0
Company: Your Company
Sheet: 1/1
Date: 2022-06-04
Drawn By: lordzurp
EasyEDA