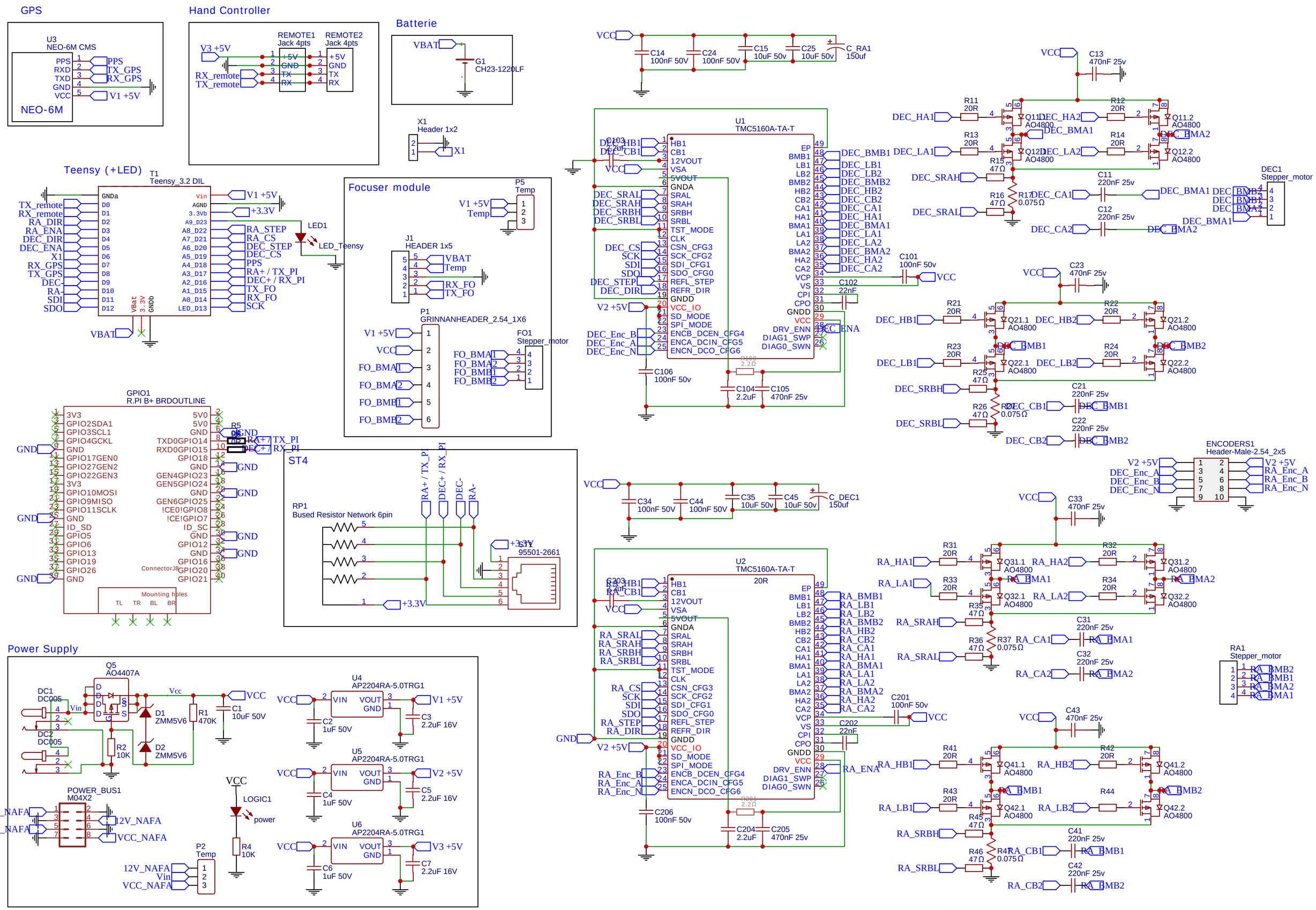

TITLE: TeenAstro Redux - Main Board	REV: 1.0
Company: TeenAstro Crew	Sheet: 1/1
Date: 2020-05-06 Drawn By: lordzurp	

EasyEDA