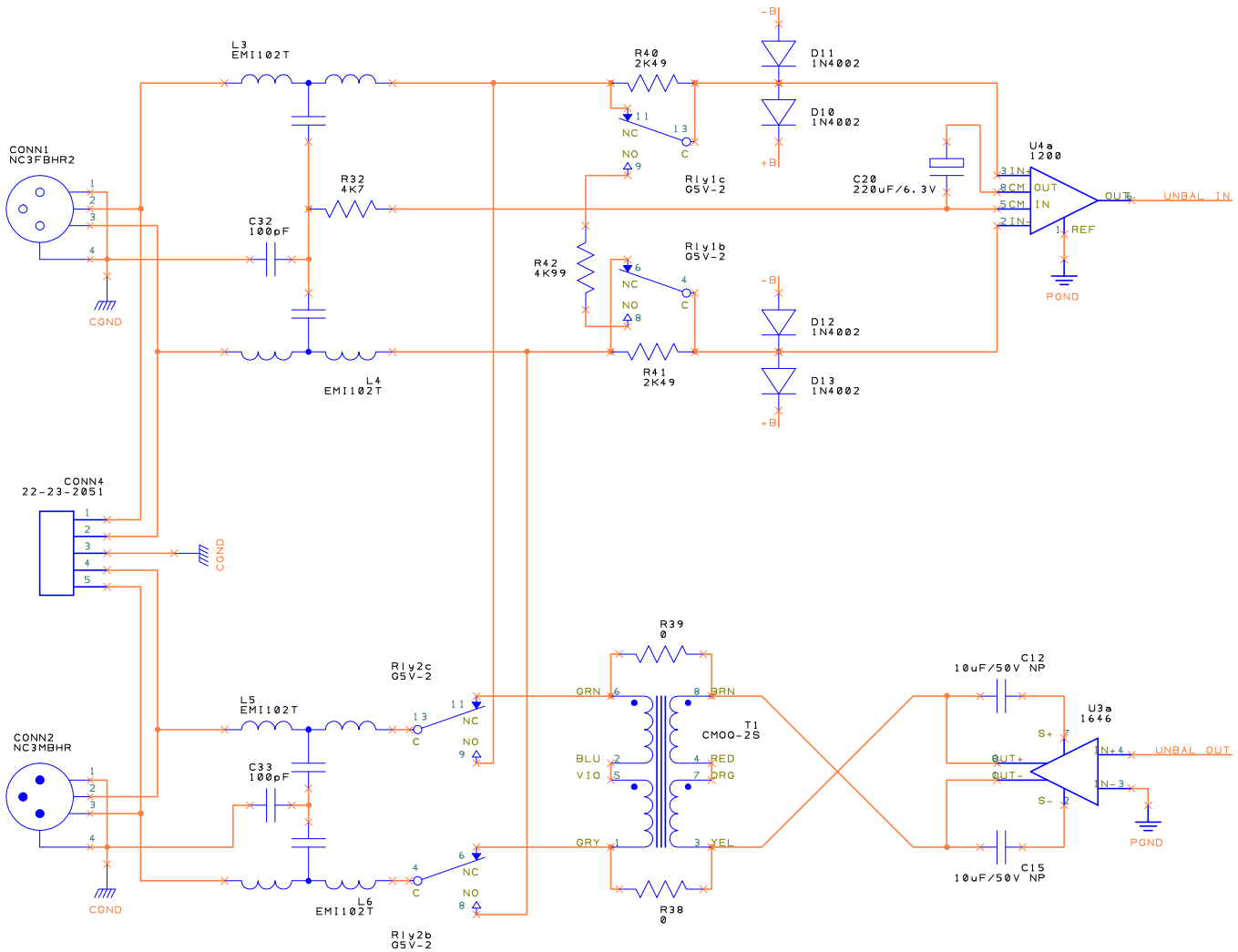

Title	B16 I/O
Created	7/05/11
Modified	7/15/13
Rev	1.3
Sheet	1 of 3

Seventh Circle Audio

1714 Franklin Street, Suite B1
Oakland, CA 94612
510-451-1499
www.seventhcircleaudio.com

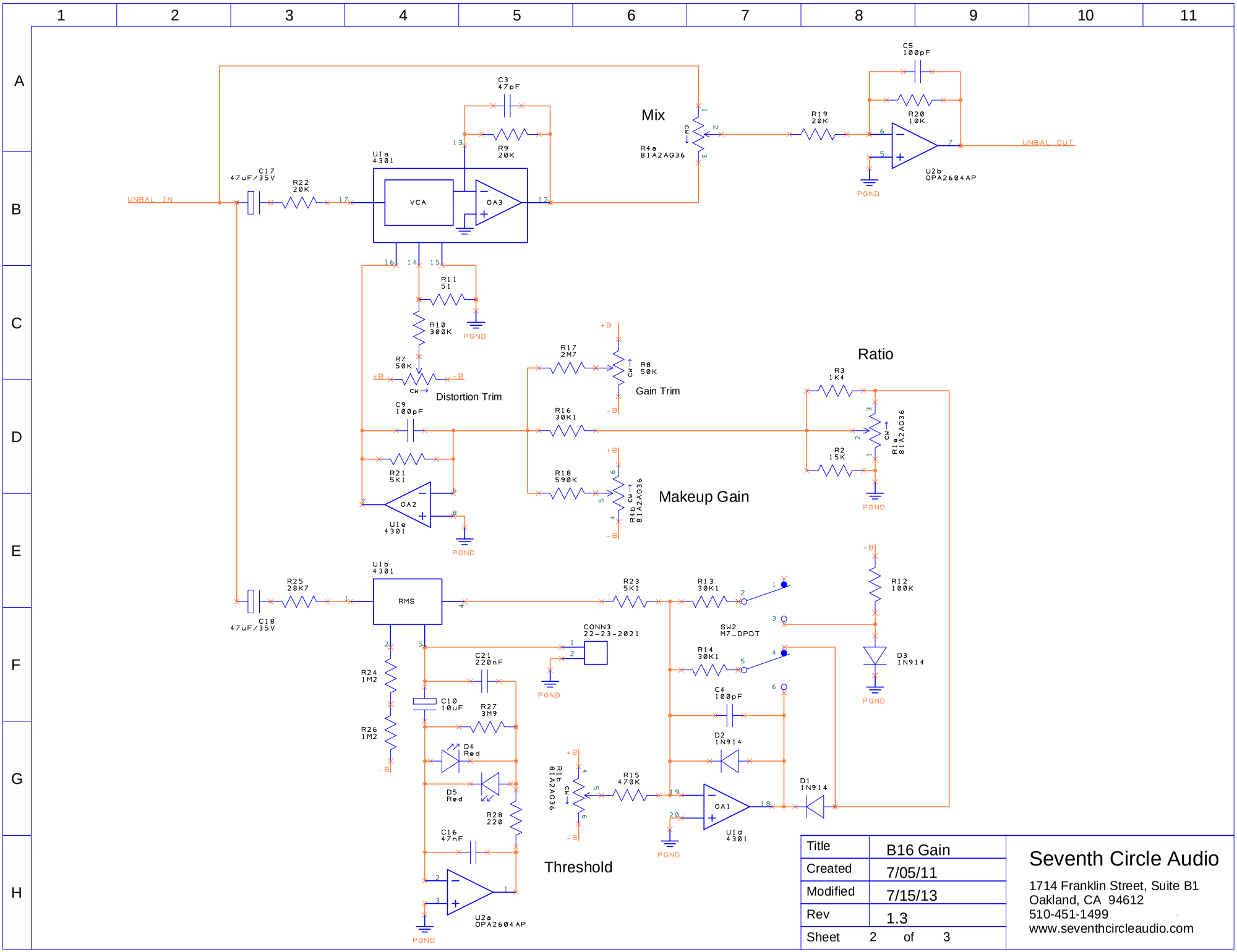

Title	B16 Gain
Created	7/05/11
Modified	7/15/13
Rev	1.3
Sheet	2 of 3

Seventh Circle Audio

1714 Franklin Street, Suite B1
Oakland, CA 94612
510-451-1499
www.seventhcircleaudio.com

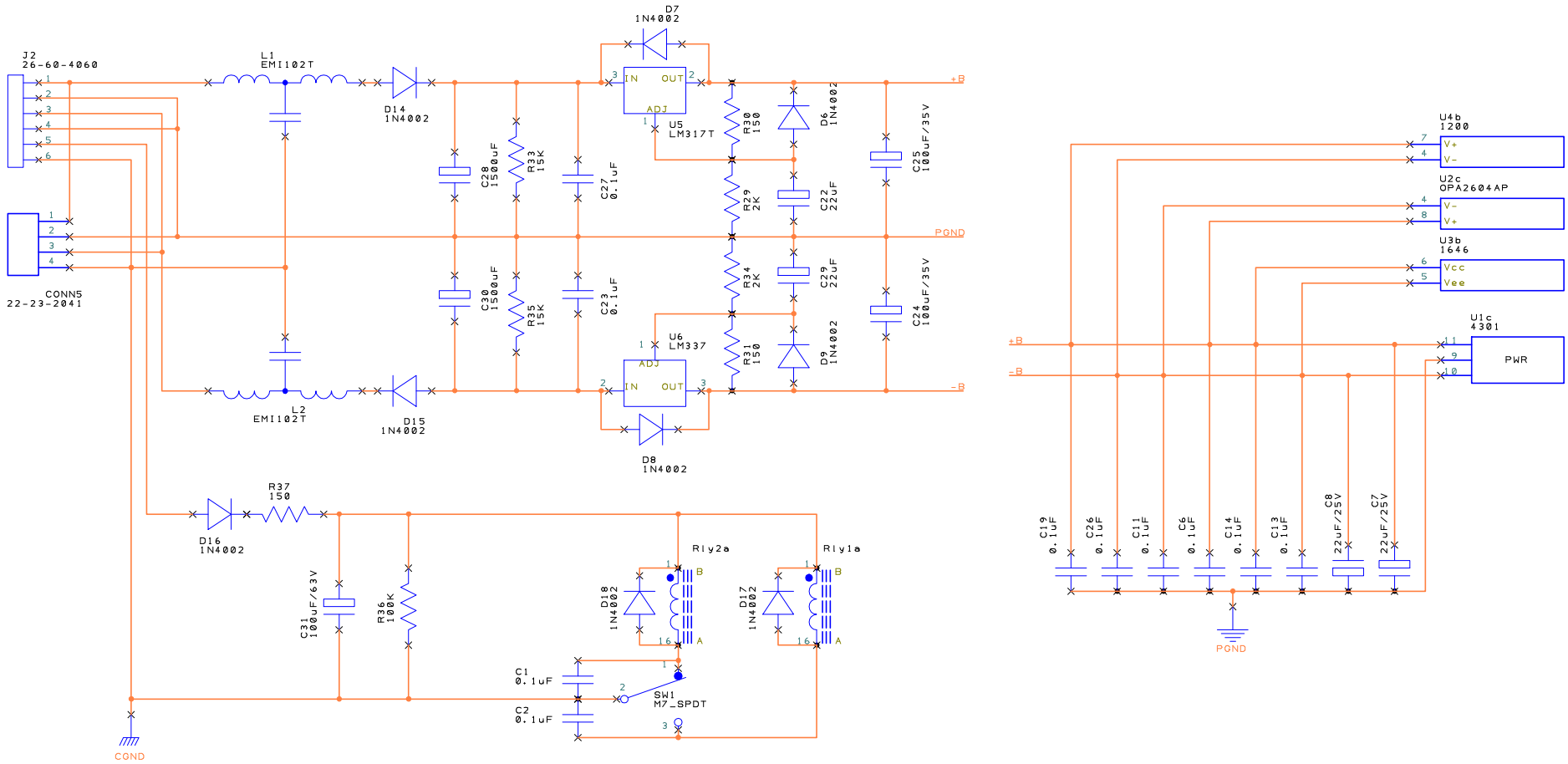

Title	B16 Power
Created	7/05/11
Modified	7/15/13
Rev	1.3
Sheet	3 of 3

Seventh Circle Audio

1714 Franklin Street, Suite B1
Oakland, CA 94612
510-451-1499
www.seventhcircleaudio.com