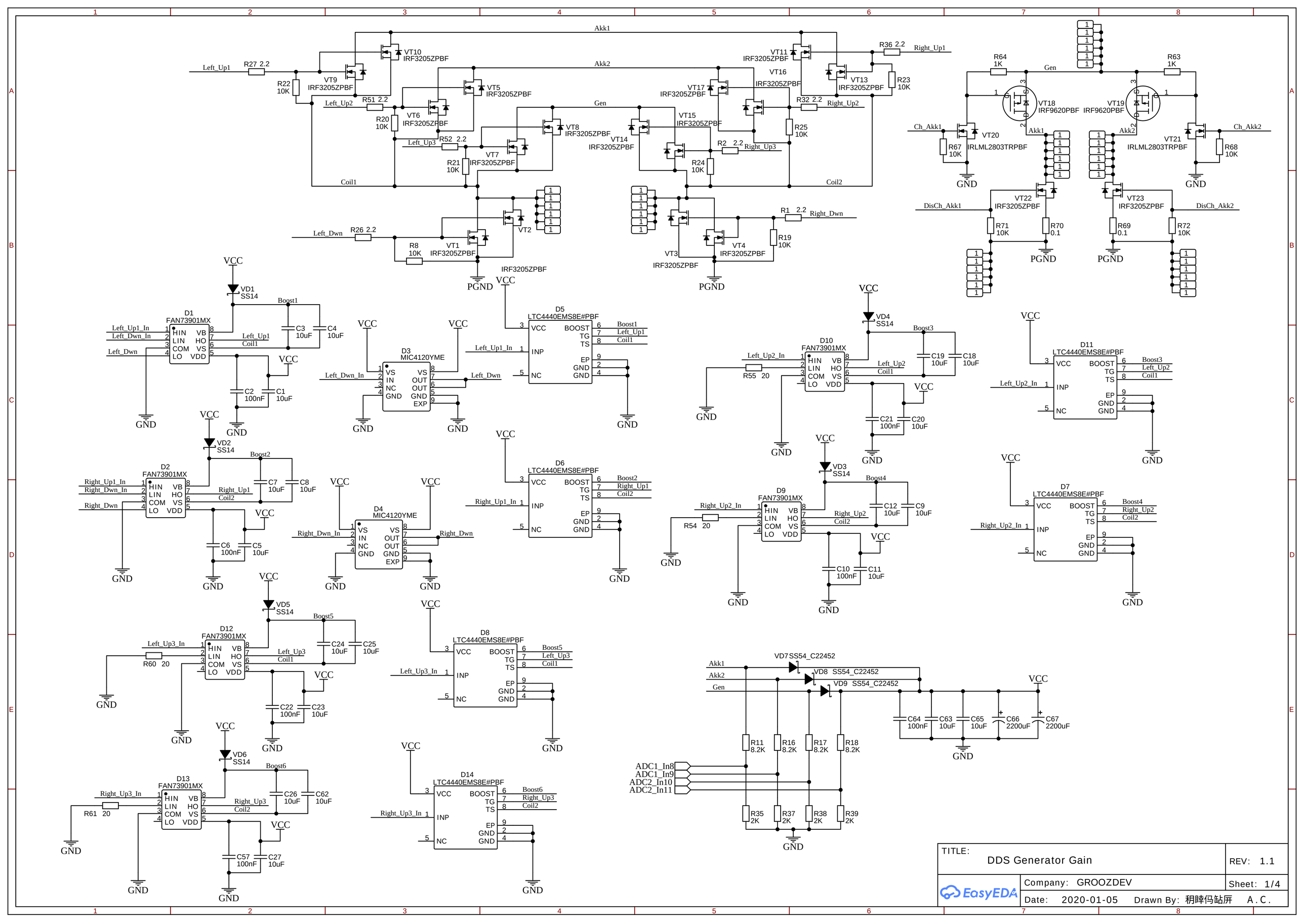

TITLE: DDS Generator Gain			REV: 1.1
EasyEDA	Company: GROOZDEV		Sheet: 1/4
	Date: 2020-01-05	Drawn By: 稆睜伲鈷屏 A.C.	

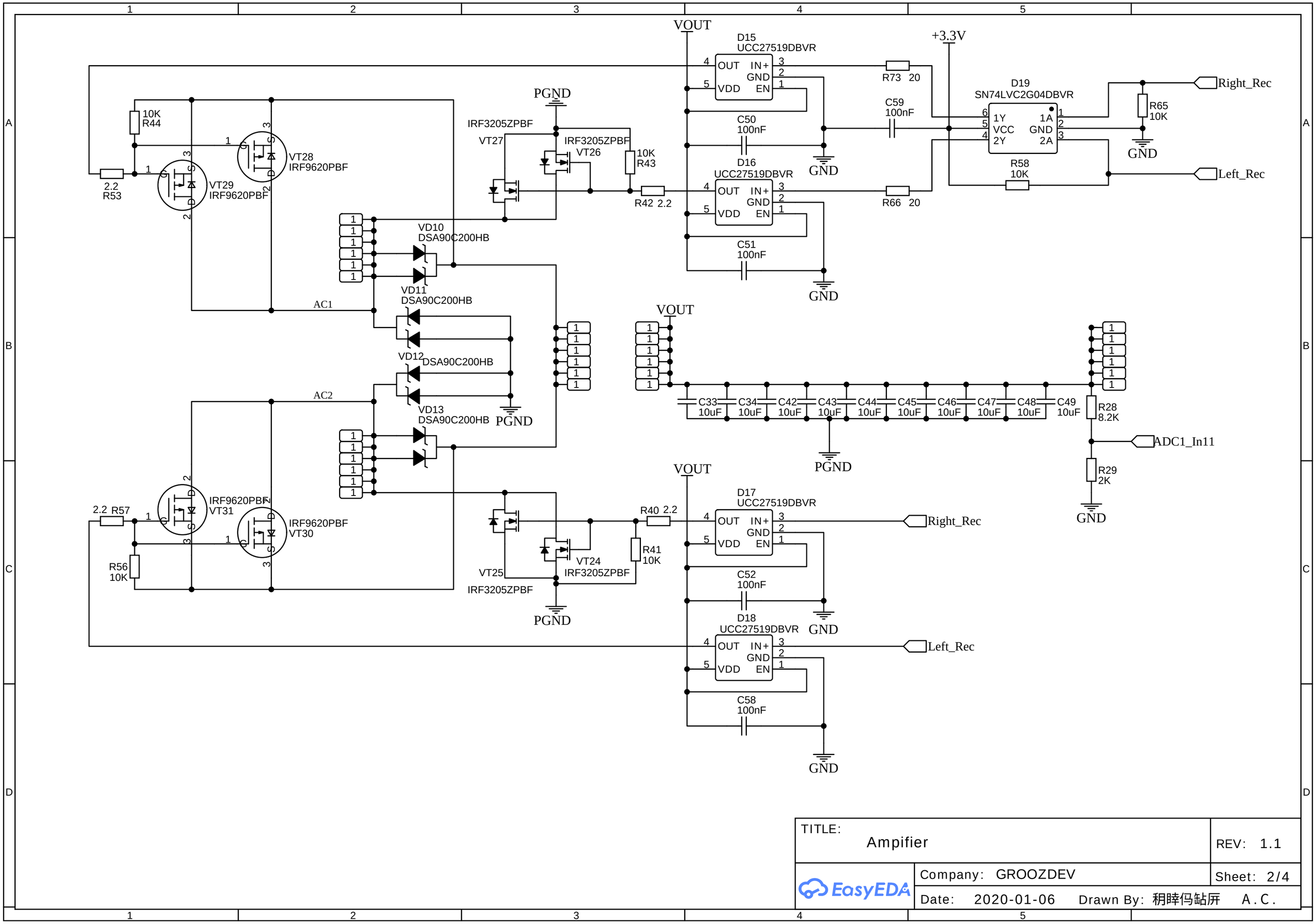

TITLE: Ampifier		REV: 1.1
EasyEDA	Company: GROOZDEV	Sheet: 2/4
	Date: 2020-01-06 Drawn By: 秀睟仍鉆屏 A.C.	

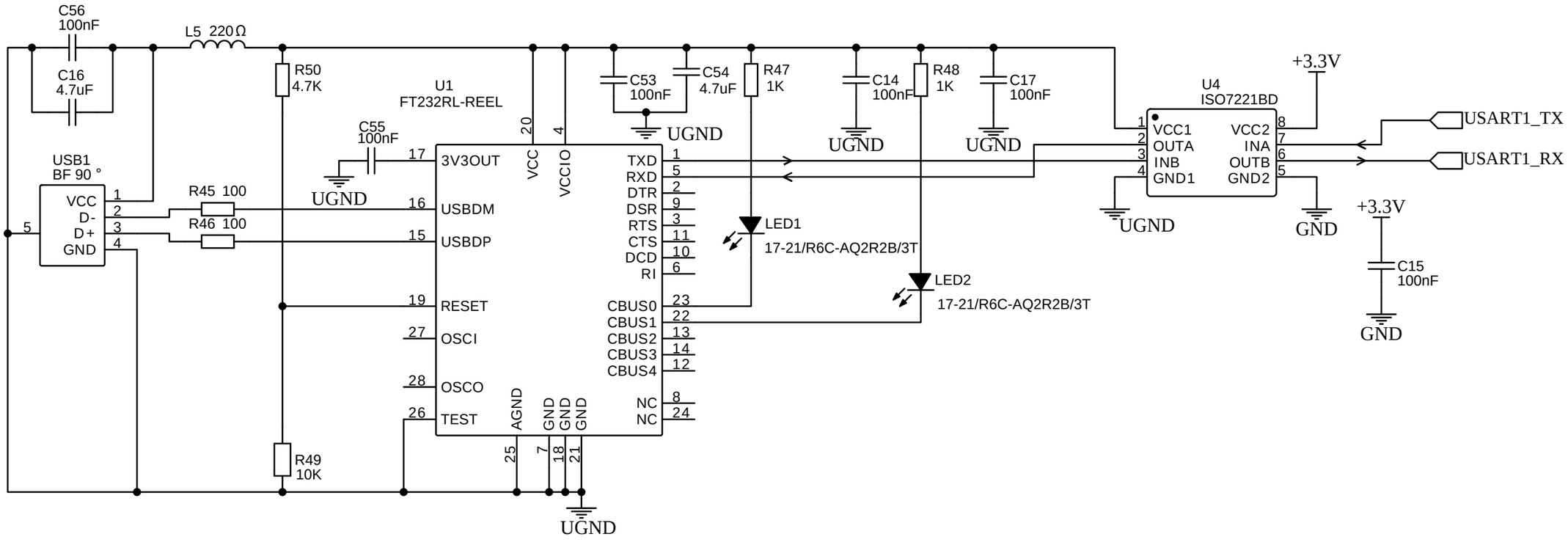

TITLE: Interface		REV: 1.1
EasyEDA	Company: GROOZDEV	Sheet: 3/4
	Date: 2020-01-15 Drawn By: 秈睟仍鉆屏 A.C.	

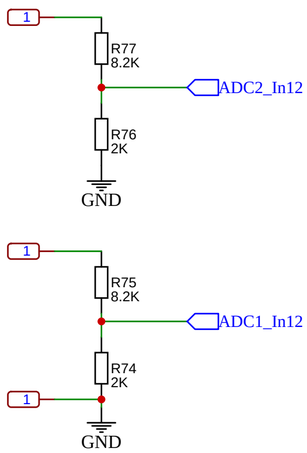

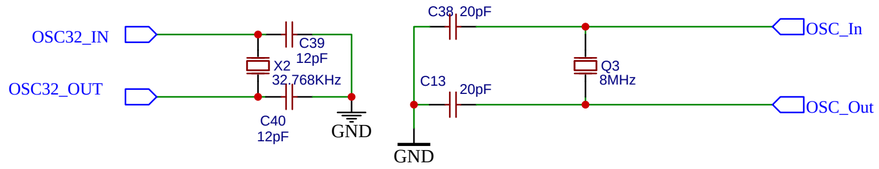

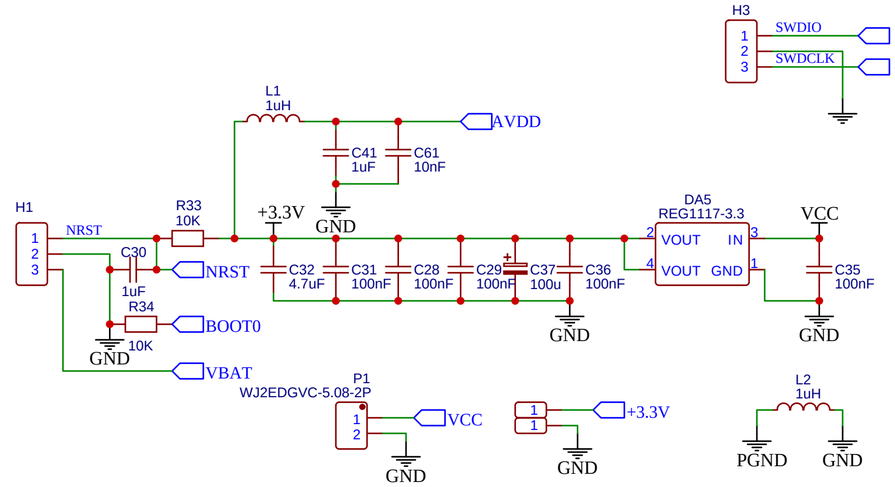

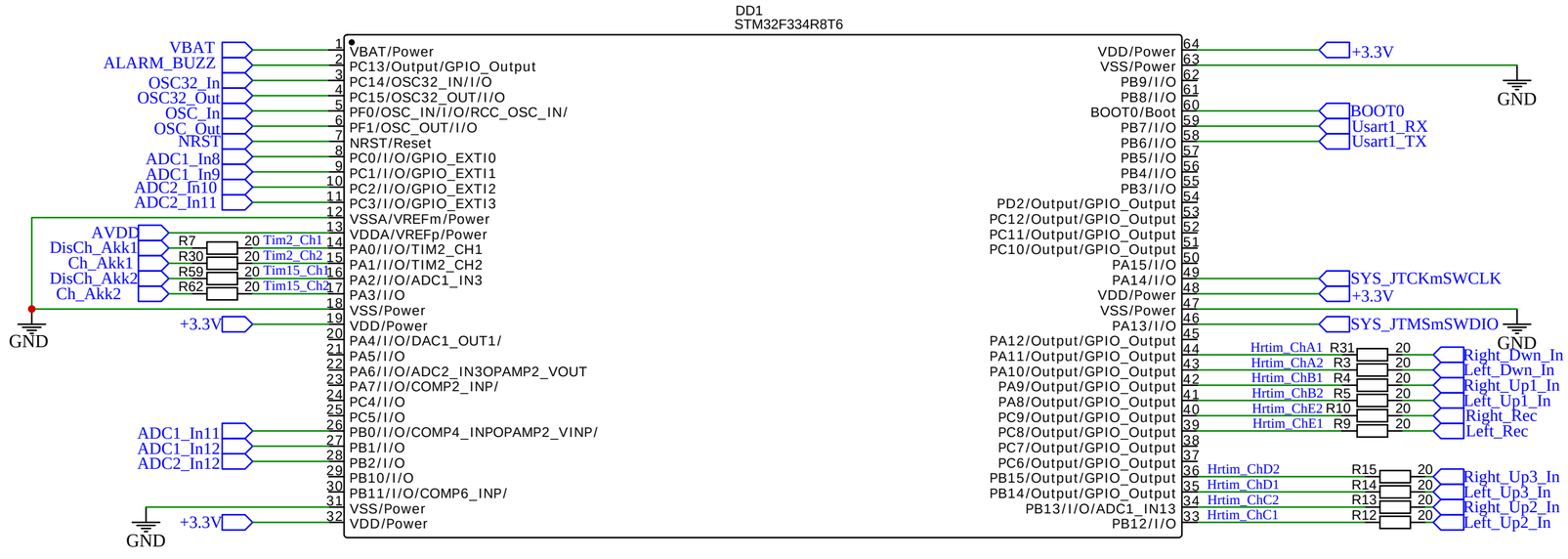

TITLE: MCU_64		REV: 1.1
EasyEDA	Company: GROOZDEV	Sheet: 4/4
	Date: 2020-01-17 Drawn By: 稆睜伲鈷屏 A.C.	