Machine Shop Copy
This is the machine shop

BILL OF MATERIALS						
MARK	STOCK #	DESCRIPTION	WIDTH	LENGTH	QTY	UNIT WEIGHT
2p1	100-02861	PL 50W - 4 1/2"	1'-4 5/16"	3'-0"	1	590.04

DXF FILE #15520101
MACHINE SHOP

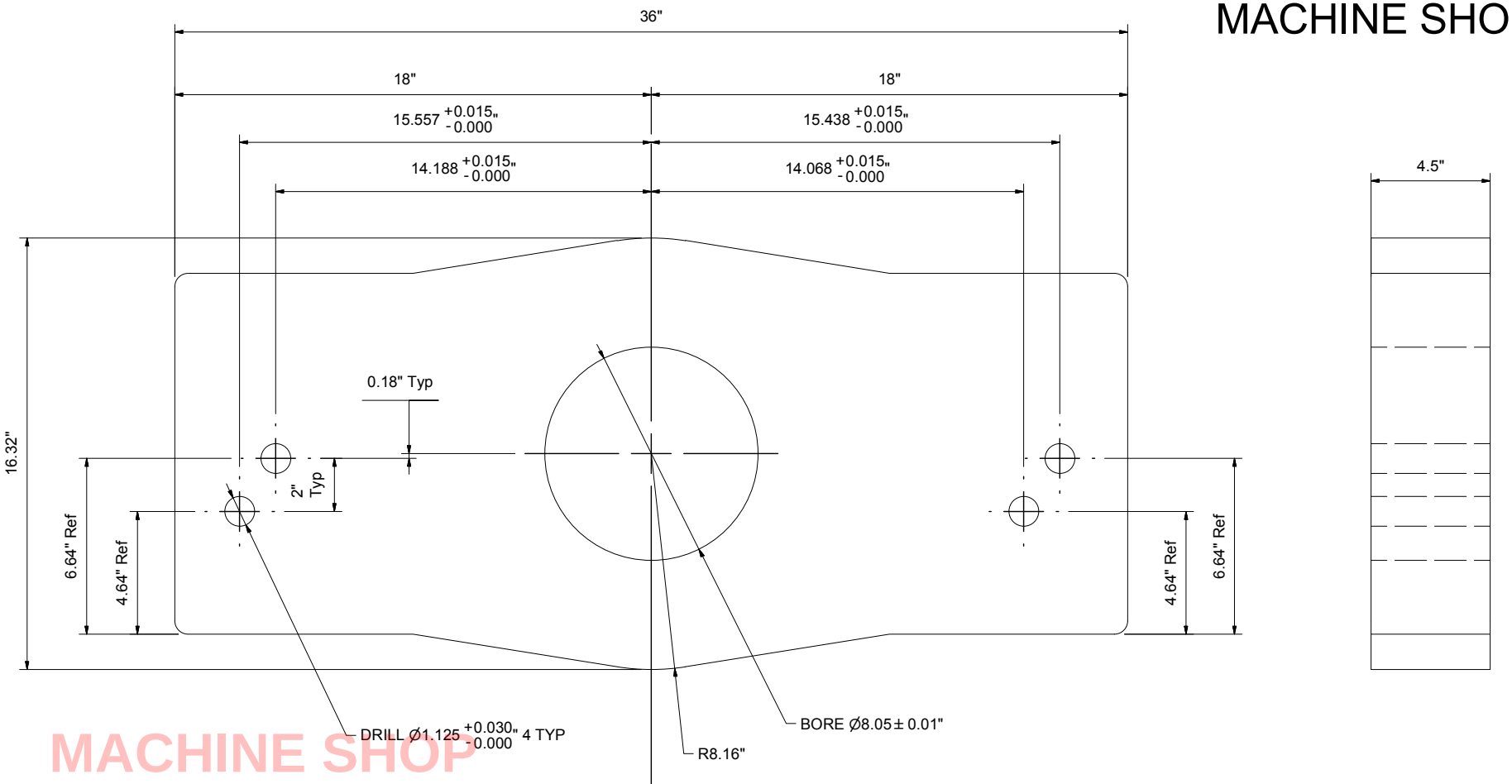

MACHINE SHOP
Issued For Construction
Date 2014-12-19

TOLERANCES AS PER QMF-03

IF IN DOUBT.....ASK!

CUSTOMER REFERENCE

Ja-Co
Welding & Consulting Ltd.
1304-8th Street, Nisku, Alberta, T9E 7M1 phone 780 955 2251 fax 780 955 3433
email: ja-co@telusplanet.net website: jacoweld.com

CUSTOMER	Ja-Co	DRAWN bmurphy	DATE
PROJECT	BECKET HOLDER	CHECKED	DATE
TITLE	Becket Holder	APPROVED	DATE
W.O. # 15520	SCALE N.T.S.	DRAWING # / SHEET # eqt-1269-A-002 7 of 19	0

BILL OF MATERIALS						
MARK	STOCK #	DESCRIPTION	WIDTH	LENGTH	QTY	UNIT WEIGHT
2p2	100-01543	PL QT100 2 1/2"	2'-10"	2'-11"	2	659.00

DXF FILE #15520102
MACHINE SHOP

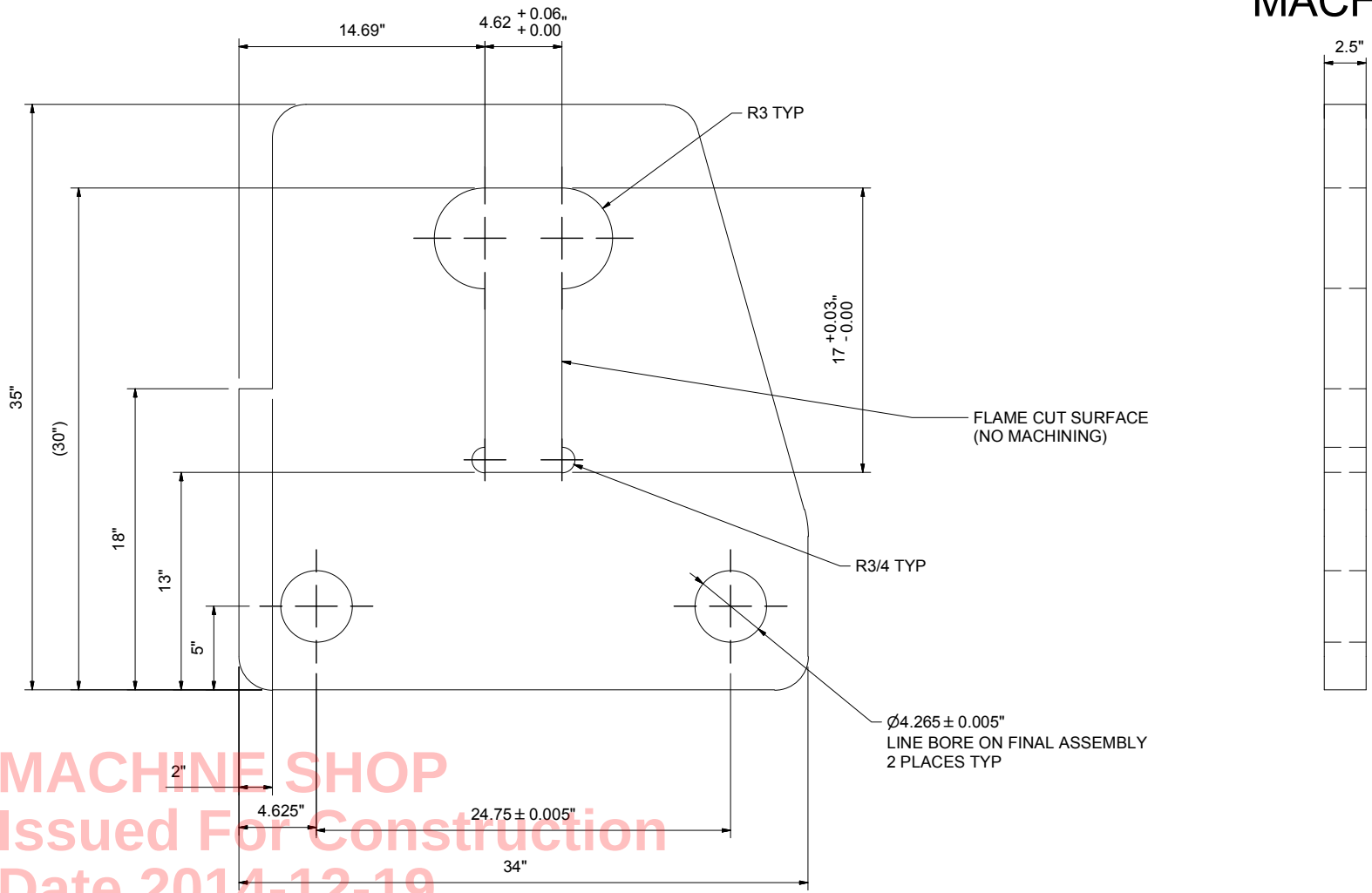

MACHINE SHOP
Issued For Construction
Date 2014-12-19

TOLERANCES AS PER QMF-03

IF IN DOUBT.....ASK!

CUSTOMER REFERENCE

Ja-Co
Welding & Consulting Ltd.
1304-8th Street, Nisku, Alberta, T9E 7M1 phone 780 955 2251 fax 780 955 3433
email: ja-co@telusplanet.net website: jacoweld.com

CUSTOMER	Ja-Co	DRAWN bmurphy	DATE
PROJECT	BECKET HOLDER	CHECKED	DATE
TITLE	Becket Holder	APPROVED	DATE
W.O. # 15520	SCALE N.T.S.	DRAWING # / SHEET # eqt-1269-A-002 8 of 19	0

BILL OF MATERIALS						
MARK	STOCK #	DESCRIPTION	WIDTH	LENGTH	QTY	UNIT WEIGHT
2p4	100-02861	PL 50W - 4 1/2"	1'-4"	2'-10"	1	528.72

DXF FILE #15520104
MACHINE SHOP

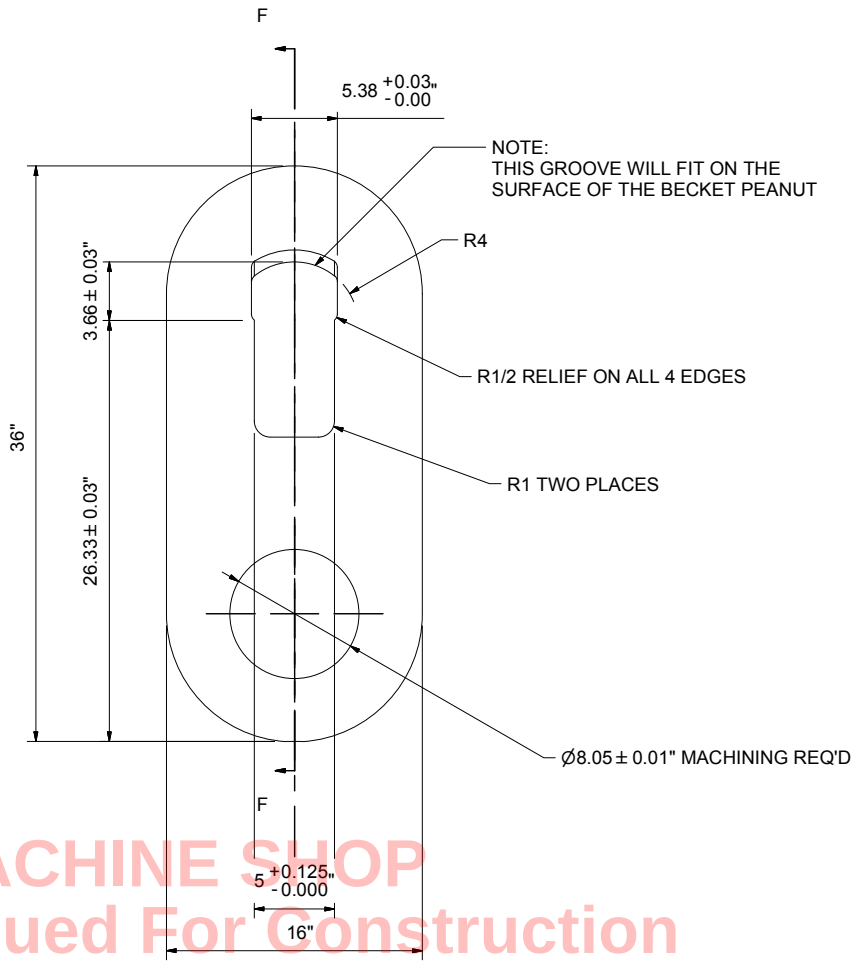

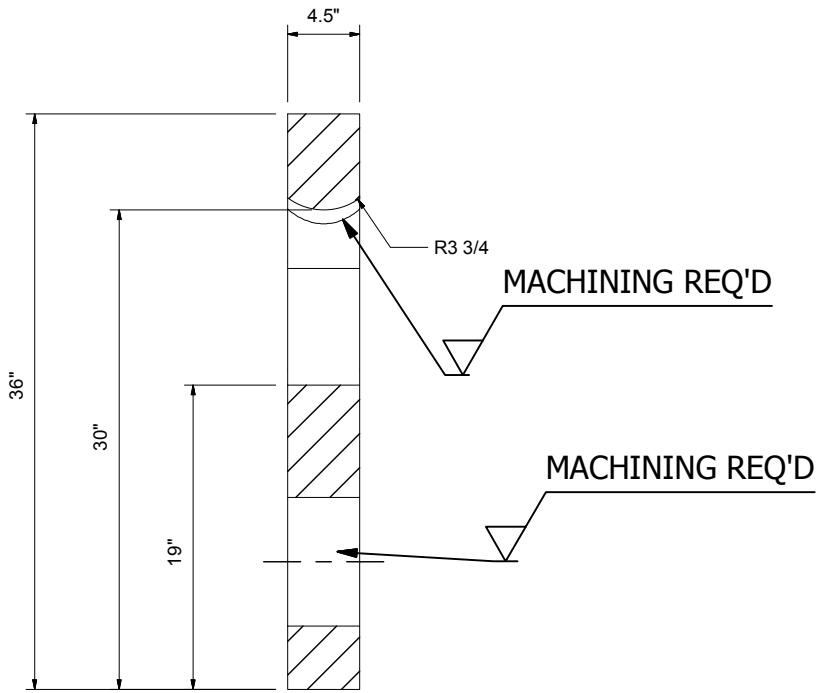

SECTION F-F
SCALE 1:12

MACHINE SHOP
Issued For Construction
Date 2014-12-19

TOLERANCES AS PER QMF-03

IF IN DOUBT.....ASK!

CUSTOMER REFERENCE

Ja-Co
Welding & Consulting Ltd.
1304-8th Street, Nisku, Alberta, T9E 7M1 phone 780 955 2251 fax 780 955 3433
email: ja-co@telusplanet.net website: jacoweld.com

CUSTOMER	Ja-Co	DRAWN bmurphy	DATE
PROJECT	BECKET HOLDER	CHECKED	DATE
TITLE	Becket Holder	APPROVED	DATE
W.O. # 15520	SCALE N.T.S.	DRAWING # / SHEET # eqt-1269-A-002 10 of 19	0

BILL OF MATERIALS						
MARK	STOCK #	DESCRIPTION	WIDTH	LENGTH	QTY	UNIT WEIGHT
2p5	100-02313	PL 50W - 1"	8"	8"	2	10.23

DXF FILE #15520105

MACHINE SHOP

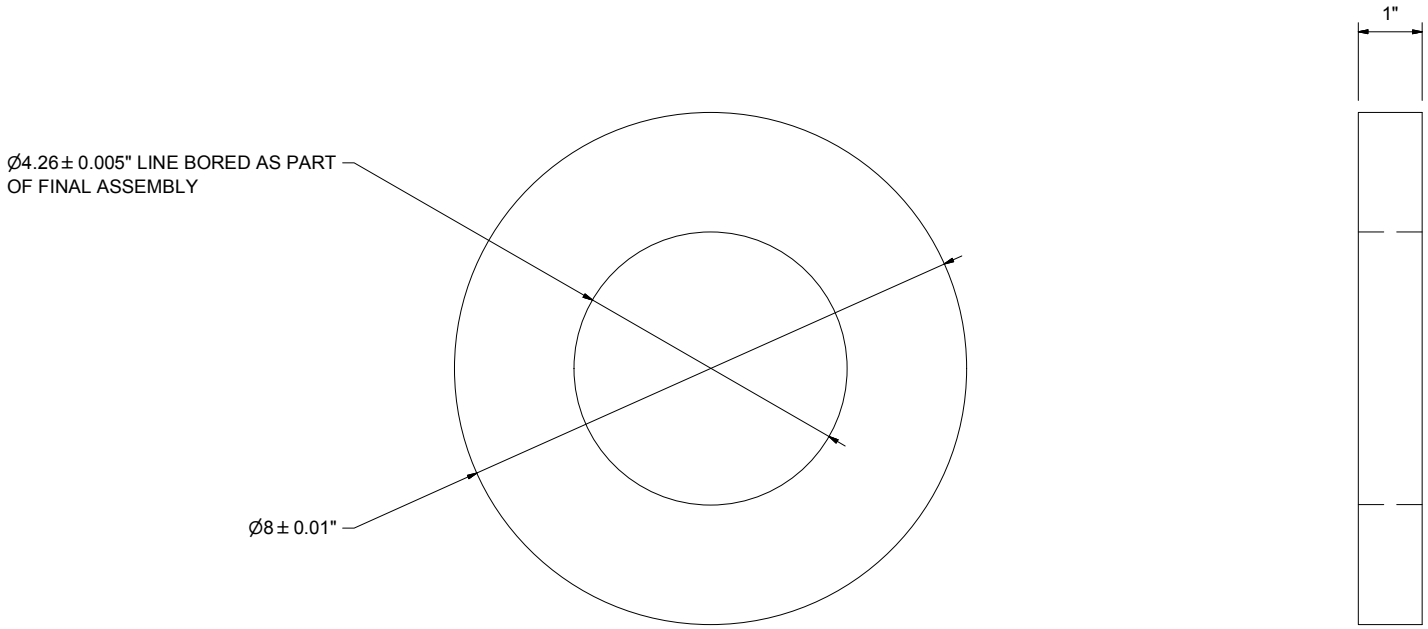

MACHINE SHOP
Issued For Construction
Date 2014-12-19

TOLERANCES AS PER QMF-03

IF IN DOUBT.....ASK!

CUSTOMER REFERENCE

Ja-Co
Welding & Consulting Ltd.
1304-8th Street, Nisku, Alberta, T9E 7M1 phone 780 955 2251 fax 780 955 3433
email: ja-co@telusplanet.net website: jacoweld.com

CUSTOMER	Ja-Co	DRAWN bmurphy	DATE
PROJECT	BECKET HOLDER	CHECKED	DATE
TITLE	Becket Holder	APPROVED	DATE
W.O. # 15520	SCALE N.T.S.	DRAWING # / SHEET # eqt-1269-A-002 11 of 19	0

BILL OF MATERIALS						
MARK	STOCK #	DESCRIPTION	WIDTH	LENGTH	QTY	UNIT WEIGHT
2p6	100-01569	PL 50W - 2"	1'-4"	4'- 5/16"	1	279.86

DXF FILE #15520106

MACHINE SHOP

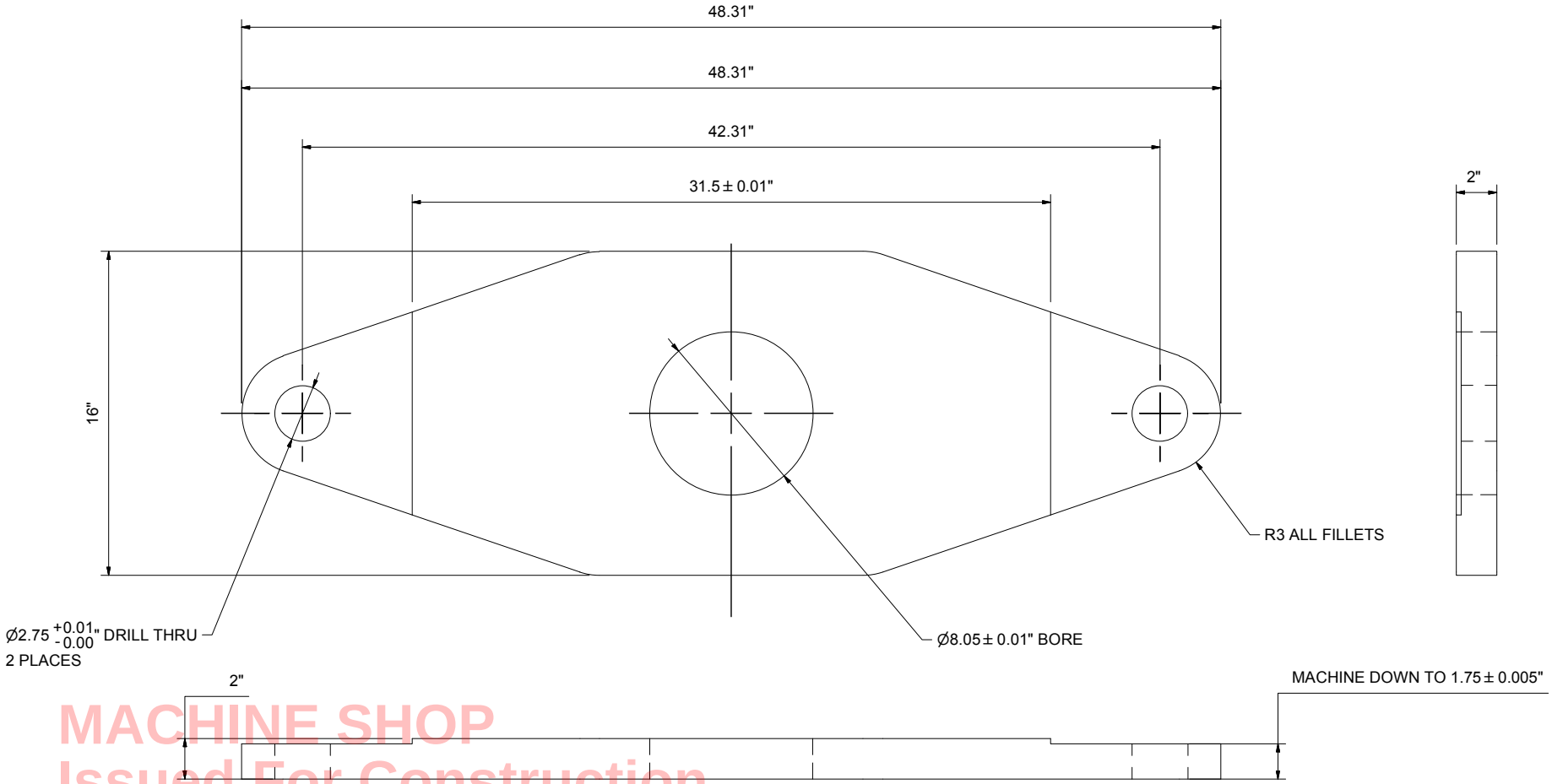

MACHINE SHOP
Issued For Construction
Date 2014-12-19

TOLERANCES AS PER QMF-03

IF IN DOUBT.....ASK!

CUSTOMER REFERENCE

Ja-Co
Welding & Consulting Ltd.
1304-8th Street, Nisku, Alberta, T9E 7M1 phone 780 955 2251 fax 780 955 3433
email: ja-co@telusplanet.net website: jacoweld.com

CUSTOMER	Ja-Co	DRAWN bmurphy	DATE
PROJECT	BECKET HOLDER	CHECKED	DATE
TITLE	Becket Holder	APPROVED	DATE
W.O. # 15520	SCALE N.T.S.	DRAWING # / SHEET # eqt-1269-A-002 12 of 19	0

BILL OF MATERIALS						
MARK	STOCK #	DESCRIPTION	WIDTH	LENGTH	QTY	UNIT WEIGHT
2p8	100-02313	PL 50W - 1"	5"	1'- 1/2"	8	10.43

DXF FILE #15520108

MACHINE SHOP

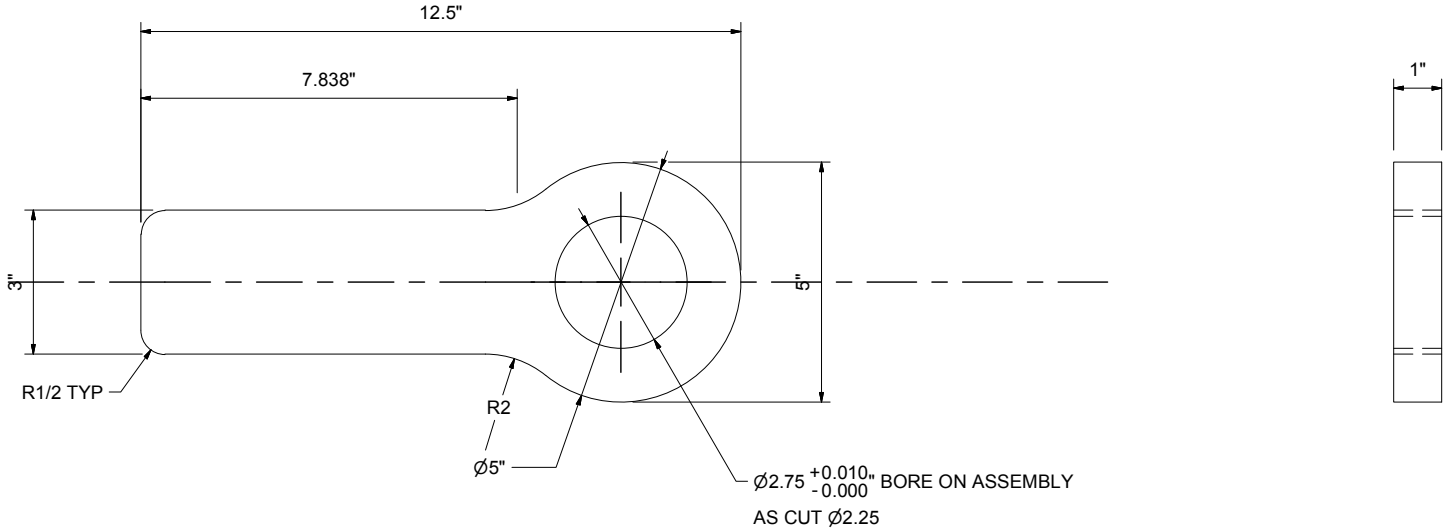

MACHINE SHOP
Issued For Construction
Date 2014-12-19

TOLERANCES AS PER QMF-03

IF IN DOUBT.....ASK!

CUSTOMER REFERENCE

Ja-Co
Welding & Consulting Ltd.
1304-8th Street, Nisku, Alberta, T9E 7M1 phone 780 955 2251 fax 780 955 3433
email: ja-co@telusplanet.net website: jacoweld.com

CUSTOMER	Ja-Co	DRAWN bmurphy	DATE
PROJECT	BECKET HOLDER	CHECKED	DATE
TITLE	Becket Holder	APPROVED	DATE
W.O. # 15520	SCALE N.T.S.	DRAWING # / SHEET # eqt-1269-A-002 14 of 19	0

BILL OF MATERIALS						
MARK	STOCK #	DESCRIPTION	WIDTH	LENGTH	QTY	UNIT WEIGHT
2r1	100-02674	4140 4 1/2" (HTSR)		2'-6 1/2"	2	122.03

MACHINE SHOP

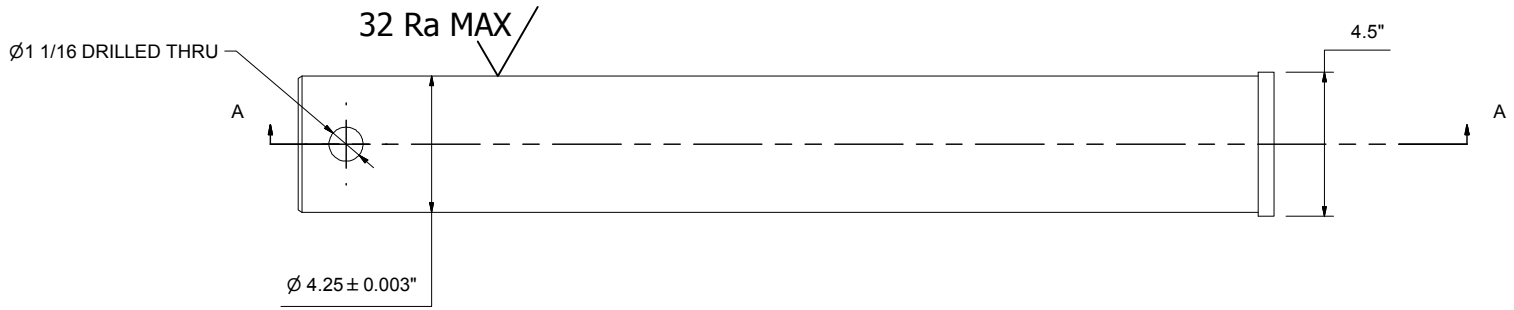

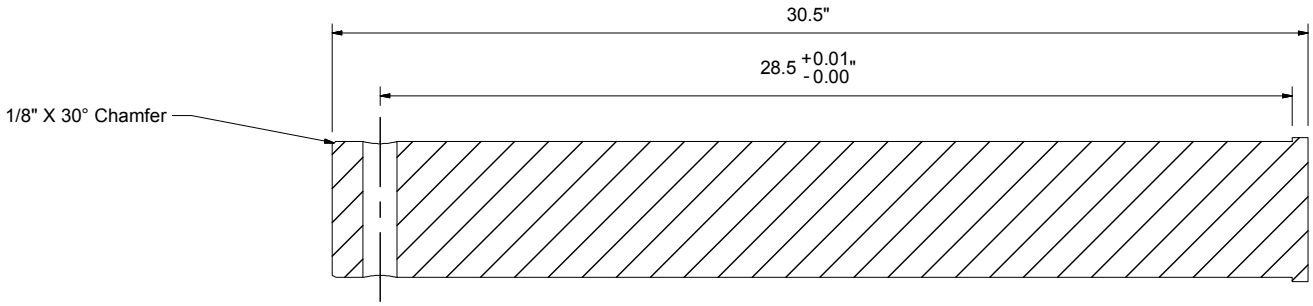

SECTION A-A
SCALE 1:6

MACHINE SHOP
Issued For Construction
Date 2014-12-19

TOLERANCES AS PER QMF-03

IF IN DOUBT.....ASK!

CUSTOMER REFERENCE

Ja-Co
Welding & Consulting Ltd.
1304-8th Street, Nisku, Alberta, T9E 7M1 phone 780 955 2251 fax 780 955 3433
email: ja-co@telusplanet.net website: jacoweld.com

CUSTOMER	Ja-Co	DRAWN bmurphy	DATE
PROJECT	BECKET HOLDER	CHECKED	DATE
TITLE	Becket Holder	APPROVED	DATE
W.O. # 15520	SCALE N.T.S.	DRAWING # / SHEET # eqt-1269-A-002 16 of 19	0

BILL OF MATERIALS						
MARK	STOCK #	DESCRIPTION	WIDTH	LENGTH	QTY	UNIT WEIGHT
2r2	100-02663	4140 2 3/4" (HTSR)		8 3/16"	4	12.39

MACHINE SHOP

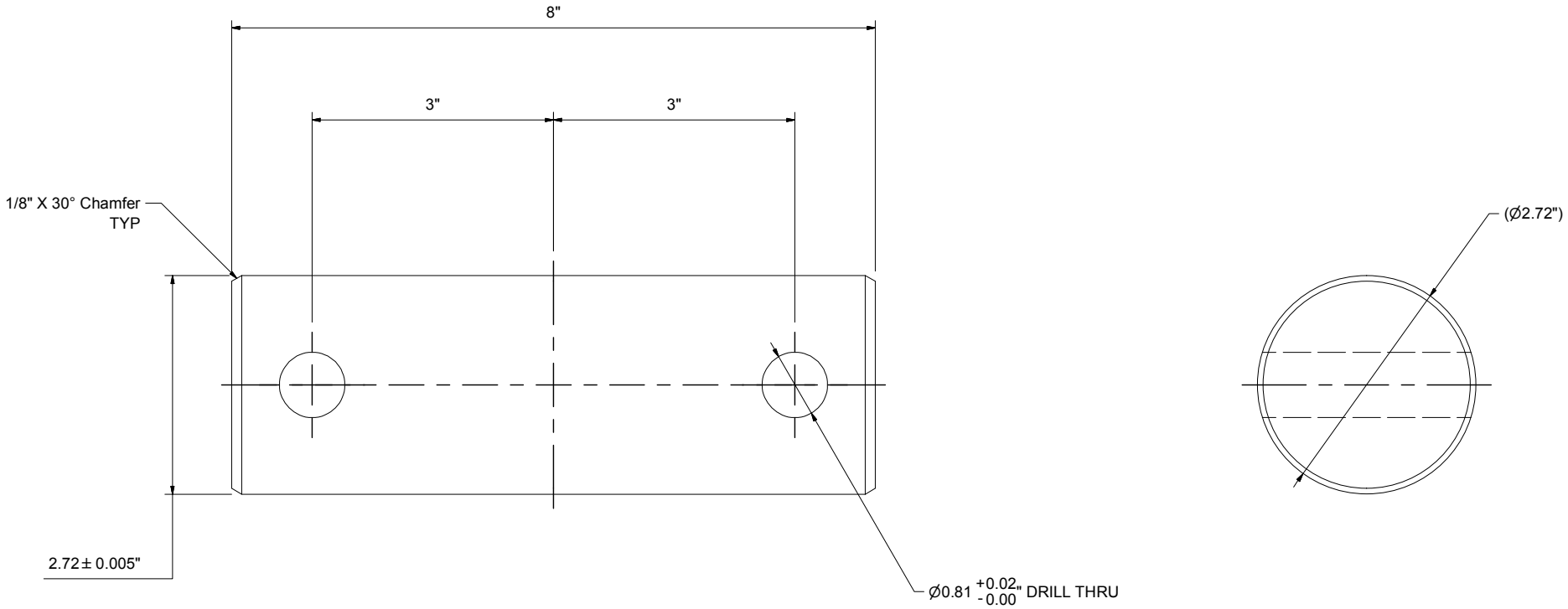

MACHINE SHOP
Issued For Construction
Date 2014-12-19

TOLERANCES AS PER QMF-03

IF IN DOUBT.....ASK!

CUSTOMER REFERENCE

Ja-Co
Welding & Consulting Ltd.
1304-8th Street, Nisku, Alberta, T9E 7M1 phone 780 955 2251 fax 780 955 3433
email: ja-co@telusplanet.net website: jacoweld.com

CUSTOMER	Ja-Co	DRAWN bmurphy	DATE
PROJECT	BECKET HOLDER	CHECKED	DATE
TITLE	Becket Holder	APPROVED	DATE
W.O. # 15520	SCALE N.T.S.	DRAWING # / SHEET # eqt-1269-A-002 17 of 19	0

BILL OF MATERIALS						
MARK	STOCK #	DESCRIPTION	WIDTH	LENGTH	QTY	UNIT WEIGHT
2z1	100-02329	MECHANICAL TUBE - 5"od x 4.124"id (C1026)		3"	2	4.32

MACHINE SHOP

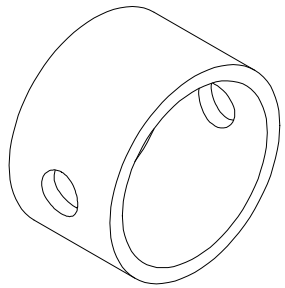

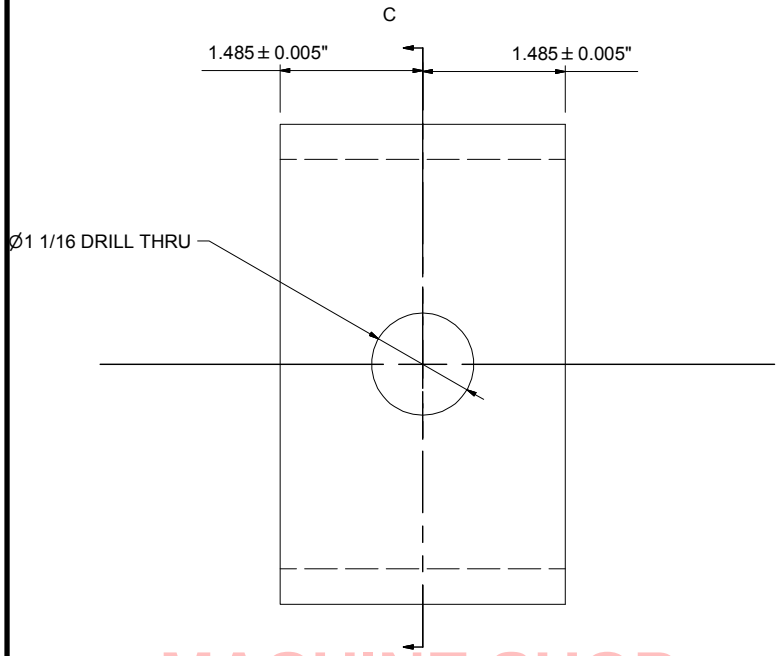

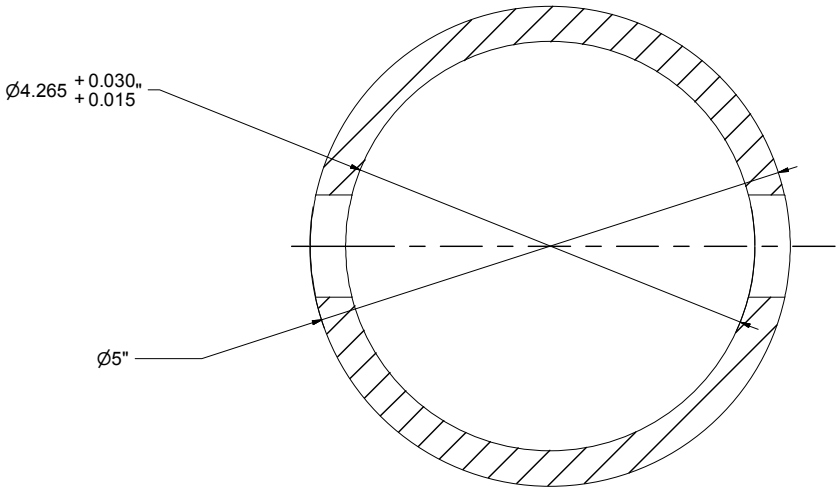

SECTION C-C
SCALE 1 / 2

MACHINE SHOP
Issued For Construction
Date 2014-12-19

TOLERANCES AS PER QMF-03

IF IN DOUBT.....ASK!

CUSTOMER REFERENCE

Ja-Co
Welding & Consulting Ltd.
1304-8th Street, Nisku, Alberta, T9E 7M1 phone 780 955 2251 fax 780 955 3433
email: ja-co@telusplanet.net website: jacoweld.com

CUSTOMER	Ja-Co	DRAWN bmurphy	DATE
PROJECT	BECKET HOLDER	CHECKED	DATE
TITLE	Becket Holder	APPROVED	DATE
W.O. # 15520	SCALE N.T.S.	DRAWING # / SHEET # eqt-1269-A-002 18 of 19	0

FOREMAN COPY
This is foreman copy

Ja-Co
Welding & Consulting Ltd.
1304-8th Street, Nisku, Alberta, T9E 7M1 phone 780 955 2251 fax 780 955 3433
email: ja-co@telusplanet.net website: jacoweld.com

PICKING LIST

Mark	Stock #	Description	Length	Qty. Req'd	In Stock	Order	Total	Taken By	Date Taken	P.O. #
2b1	200-00997	BOLT Gr.5-3/4" x 3 1/2"		8						
2b3	200-00965	NUT Gr.5-3/4"		8						
2b2	200-01314	BOLT Gr.5-1" x 6 1/2"		1						
2b4	200-00967	NUT Gr.5-1"		1						
2b5	400-01736	BOLT Gr.8-1" x 9"		2						
2b6	400-01736	NUT Gr.8-1"		2						

Foreman copy
Issued For Construction
Date 2014-12-19

Customer :	Ja-Co	Drawn : bmurphy	
Project :	BECKET HOLDER	Checked :	
Title :	Becket Holder	Approved :	

Customer Reference :	W.O. # 15520	Dwg. # eqt-1269-A-002	Page : 6 of 19	0

BILL OF MATERIALS						
MARK	STOCK #	DESCRIPTION	WIDTH	LENGTH	QTY	UNIT WEIGHT
2p1	100-02861	PL 50W - 4 1/2"	1'-4 5/16"	3'-0"	1	590.04

DXF FILE #15520101
MACHINE SHOP

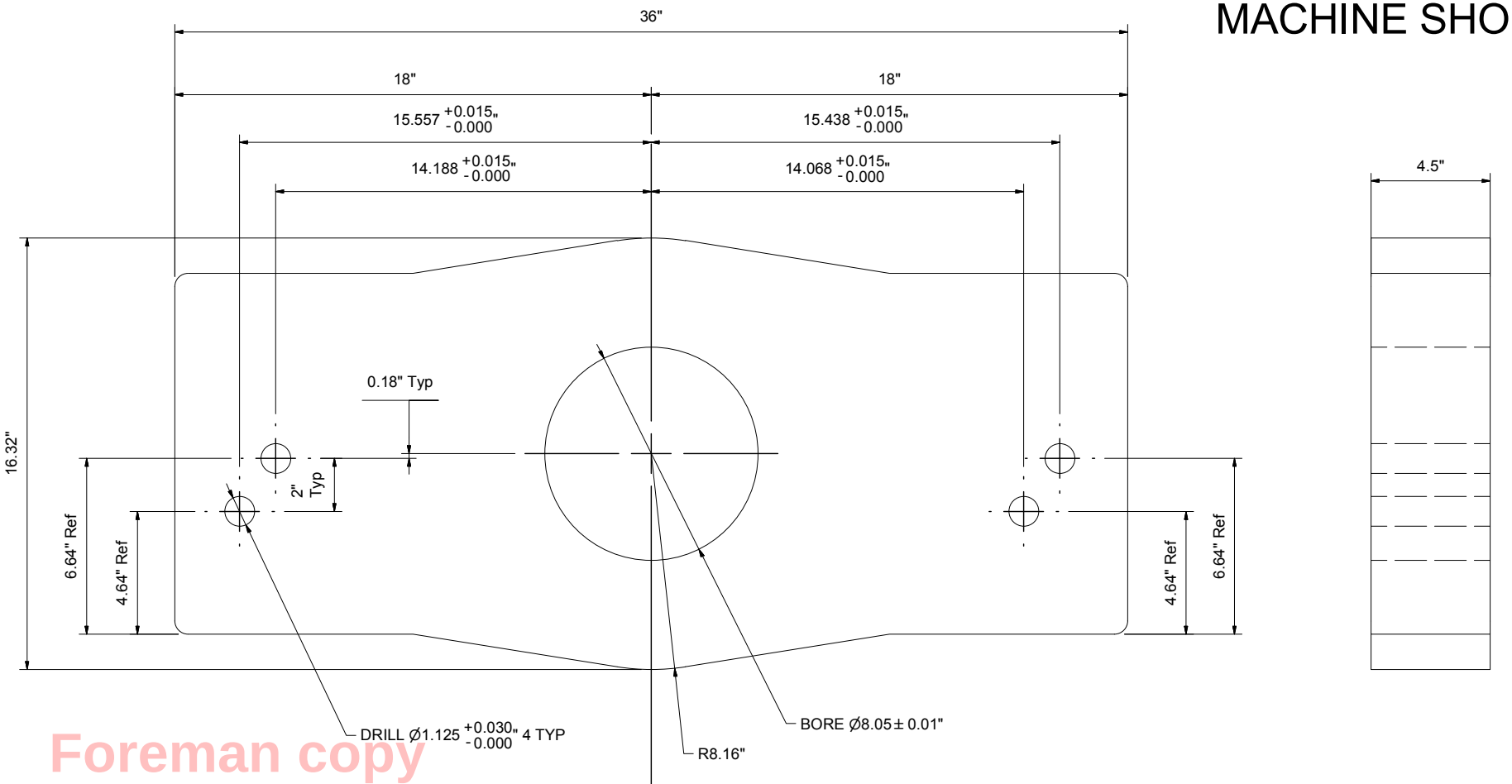

Foreman copy
Issued For Construction
Date 2014-12-19

TOLERANCES AS PER QMF-03

IF IN DOUBT.....ASK!

CUSTOMER REFERENCE

Ja-Co Welding & Consulting Ltd.
1304-8th Street, Nisku, Alberta, T9E 7M1 phone 780 955 2251 fax 780 955 3433
email: ja-co@telusplanet.net website: jacoweld.com

CUSTOMER	Ja-Co	DRAWN bmurphy	DATE
PROJECT	BECKET HOLDER	CHECKED	DATE
TITLE	Becket Holder	APPROVED	DATE
W.O. # 15520	SCALE N.T.S.	DRAWING # / SHEET # eqt-1269-A-002 7 of 19	0

BILL OF MATERIALS						
MARK	STOCK #	DESCRIPTION	WIDTH	LENGTH	QTY	UNIT WEIGHT
2p2	100-01543	PL QT100 2 1/2"	2'-10"	2'-11"	2	659.00

DXF FILE #15520102
MACHINE SHOP

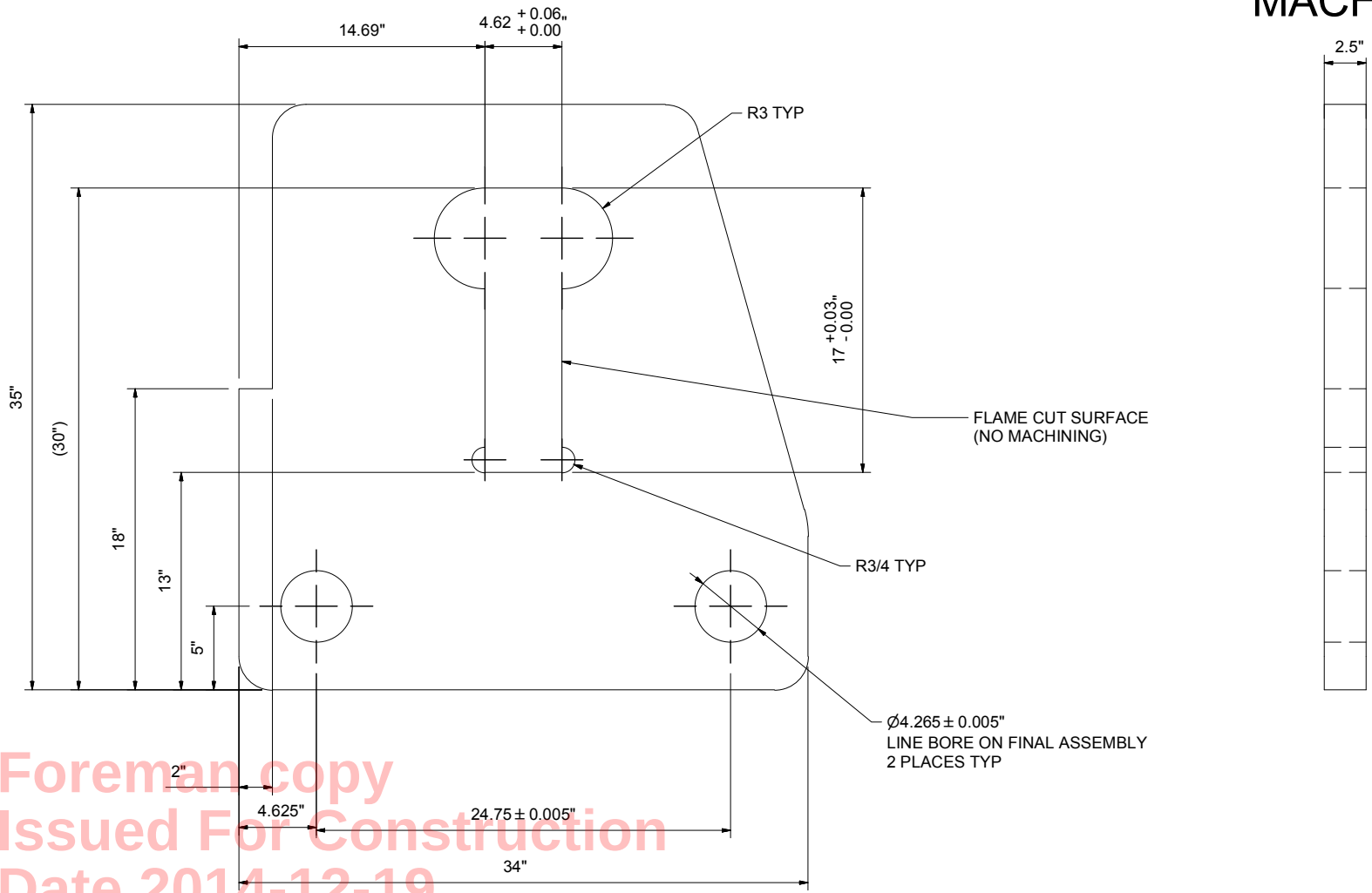

Foreman copy
Issued For Construction
Date 2014-12-19

TOLERANCES AS PER QMF-03

IF IN DOUBT.....ASK!

CUSTOMER REFERENCE

Ja-Co
Welding & Consulting Ltd.
1304-8th Street, Nisku, Alberta, T9E 7M1 phone 780 955 2251 fax 780 955 3433
email: ja-co@telusplanet.net website: jacoweld.com

CUSTOMER	Ja-Co	DRAWN bmurphy	DATE
PROJECT	BECKET HOLDER	CHECKED	DATE
TITLE	Becket Holder	APPROVED	DATE
W.O. # 15520	SCALE N.T.S.	DRAWING # / SHEET # eqt-1269-A-002 8 of 19	0

BILL OF MATERIALS						
MARK	STOCK #	DESCRIPTION	WIDTH	LENGTH	QTY	UNIT WEIGHT
2p3	100-02316	PL 50W - 2"	1'-2"	2'-2"	1	197.69

ALL SURFACES
FLAME CUT
(NO MACHINING)

DXF FILE #15520103

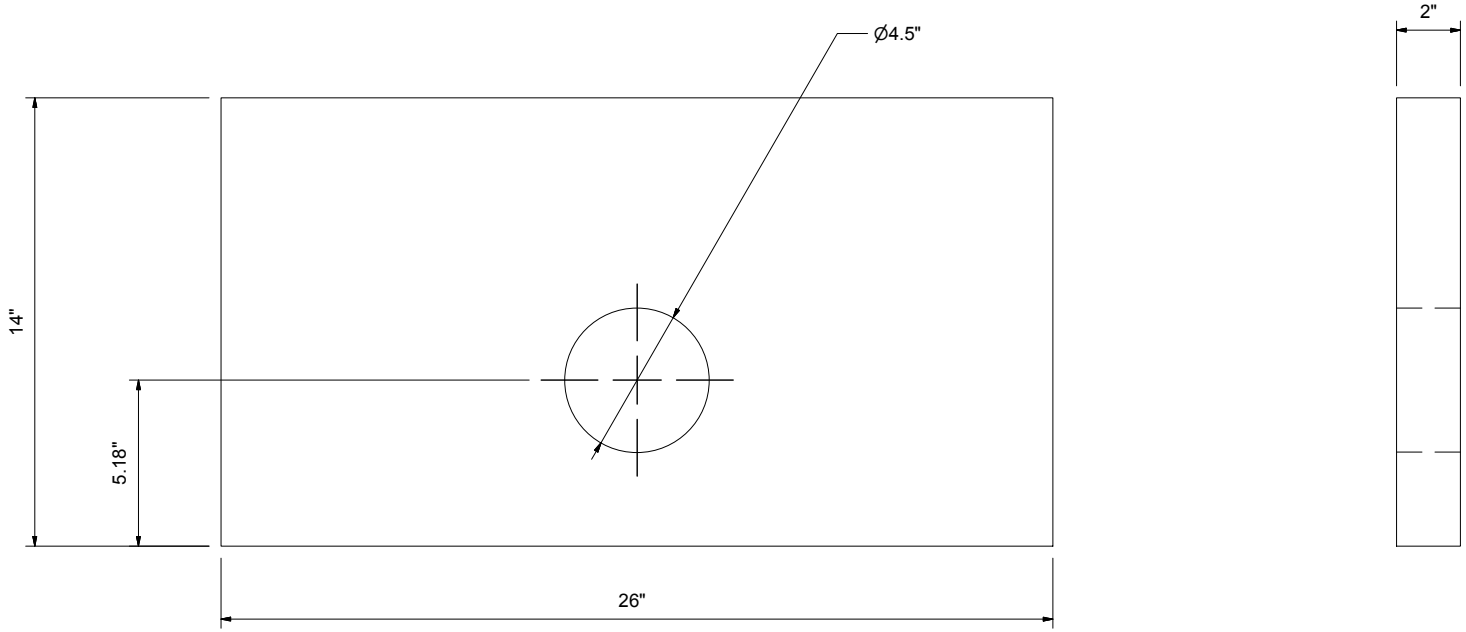

Foreman copy
Issued For Construction
Date 2014-12-19

TOLERANCES AS PER QMF-03

IF IN DOUBT.....ASK!

CUSTOMER REFERENCE

Ja-Co
Welding & Consulting Ltd.
1304-8th Street, Nisku, Alberta, T9E 7M1 phone 780 955 2251 fax 780 955 3433
email: ja-co@telusplanet.net website: jacoweld.com

CUSTOMER	Ja-Co	DRAWN bmurphy	DATE
PROJECT	BECKET HOLDER	CHECKED	DATE
TITLE	Becket Holder	APPROVED	DATE
W.O. # 15520	SCALE N.T.S.	DRAWING # / SHEET # eqt-1269-A-002 9 of 19	0

BILL OF MATERIALS						
MARK	STOCK #	DESCRIPTION	WIDTH	LENGTH	QTY	UNIT WEIGHT
2p4	100-02861	PL 50W - 4 1/2"	1'-4"	2'-10"	1	528.72

DXF FILE #15520104
MACHINE SHOP

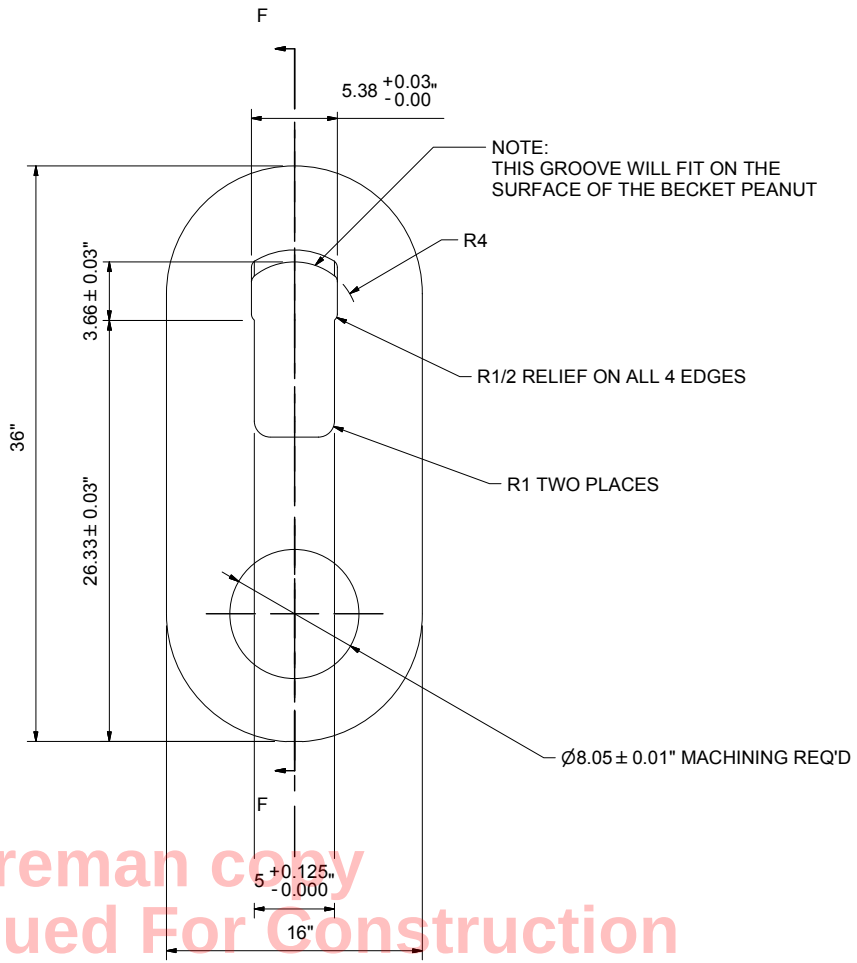

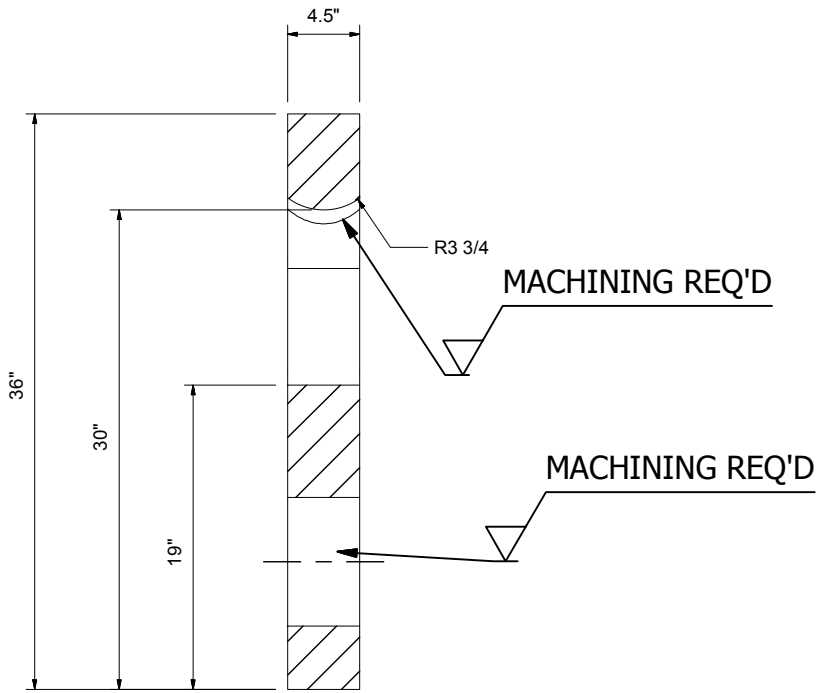

SECTION F-F
SCALE 1:12

Foreman copy
Issued For Construction
Date 2014-12-19

TOLERANCES AS PER QMF-03

IF IN DOUBT.....ASK!

CUSTOMER REFERENCE

Ja-Co
Welding & Consulting Ltd.
1304-8th Street, Nisku, Alberta, T9E 7M1 phone 780 955 2251 fax 780 955 3433
email: ja-co@telusplanet.net website: jacoweld.com

CUSTOMER	Ja-Co	DRAWN bmurphy	DATE
PROJECT	BECKET HOLDER	CHECKED	DATE
TITLE	Becket Holder	APPROVED	DATE
W.O. # 15520	SCALE N.T.S.	DRAWING # / SHEET # eqt-1269-A-002 10 of 19	0

BILL OF MATERIALS						
MARK	STOCK #	DESCRIPTION	WIDTH	LENGTH	QTY	UNIT WEIGHT
2p5	100-02313	PL 50W - 1"	8"	8"	2	10.23

DXF FILE #15520105

MACHINE SHOP

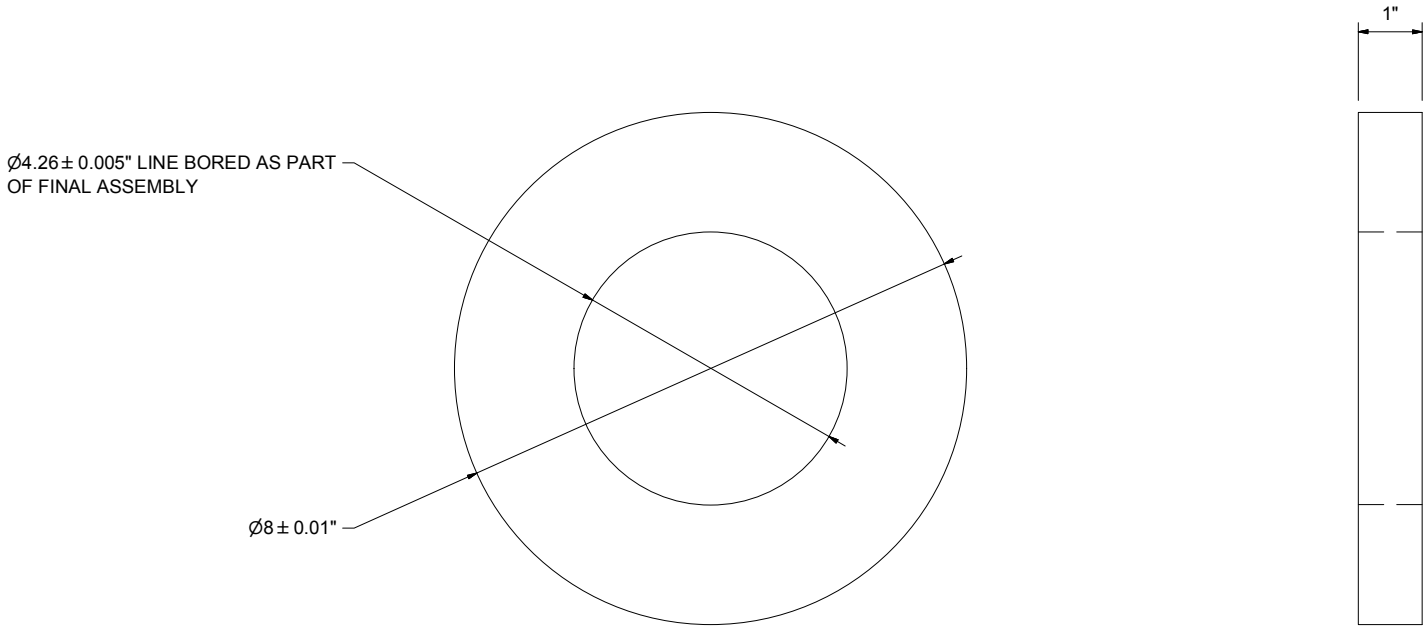

Foreman copy
Issued For Construction
Date 2014-12-19

TOLERANCES AS PER QMF-03

IF IN DOUBT.....ASK!

CUSTOMER REFERENCE

Ja-Co
Welding & Consulting Ltd.
1304-8th Street, Nisku, Alberta, T9E 7M1 phone 780 955 2251 fax 780 955 3433
email: ja-co@telusplanet.net website: jacoweld.com

CUSTOMER	Ja-Co	DRAWN bmurphy	DATE
PROJECT	BECKET HOLDER	CHECKED	DATE
TITLE	Becket Holder	APPROVED	DATE
W.O. # 15520	SCALE N.T.S.	DRAWING # / SHEET # eqt-1269-A-002 11 of 19	0

BILL OF MATERIALS						
MARK	STOCK #	DESCRIPTION	WIDTH	LENGTH	QTY	UNIT WEIGHT
2p6	100-01569	PL 50W - 2"	1'-4"	4'- 5/16"	1	279.86

DXF FILE #15520106
MACHINE SHOP

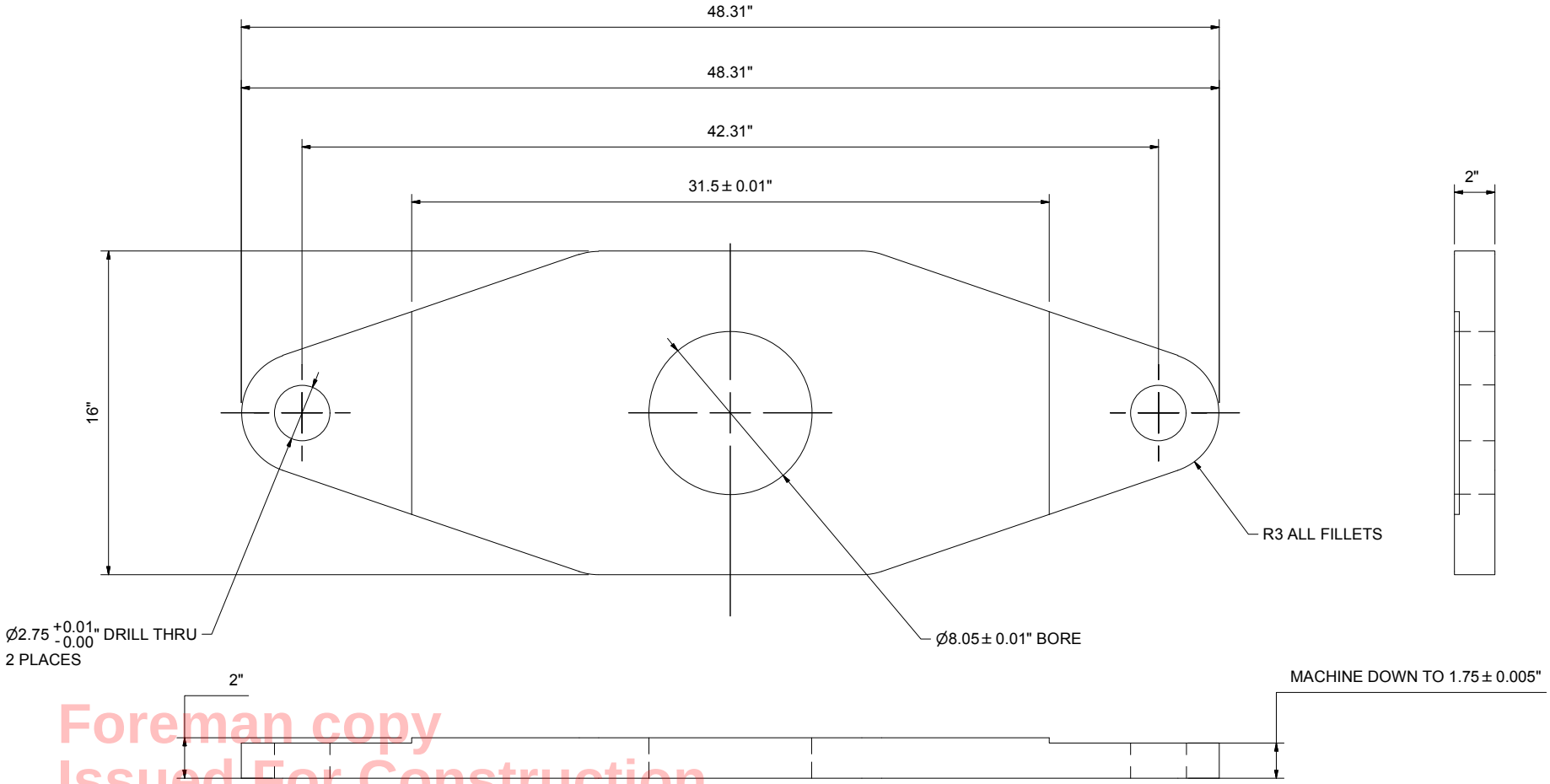

Foreman copy
Issued For Construction
Date 2014-12-19

TOLERANCES AS PER QMF-03

IF IN DOUBT.....ASK!

CUSTOMER REFERENCE

Ja-Co
Welding & Consulting Ltd.
1304-8th Street, Nisku, Alberta, T9E 7M1 phone 780 955 2251 fax 780 955 3433
email: ja-co@telusplanet.net website: jacoweld.com

CUSTOMER	Ja-Co	DRAWN bmurphy	DATE
PROJECT	BECKET HOLDER	CHECKED	DATE
TITLE	Becket Holder	APPROVED	DATE
W.O. # 15520	SCALE N.T.S.	DRAWING # / SHEET # eqt-1269-A-002 12 of 19	0

BILL OF MATERIALS						
MARK	STOCK #	DESCRIPTION	WIDTH	LENGTH	QTY	UNIT WEIGHT
2p7	100-02316	PL 50W - 2"	2"	2'-11"	2	39.75

DXF FILE #15520107

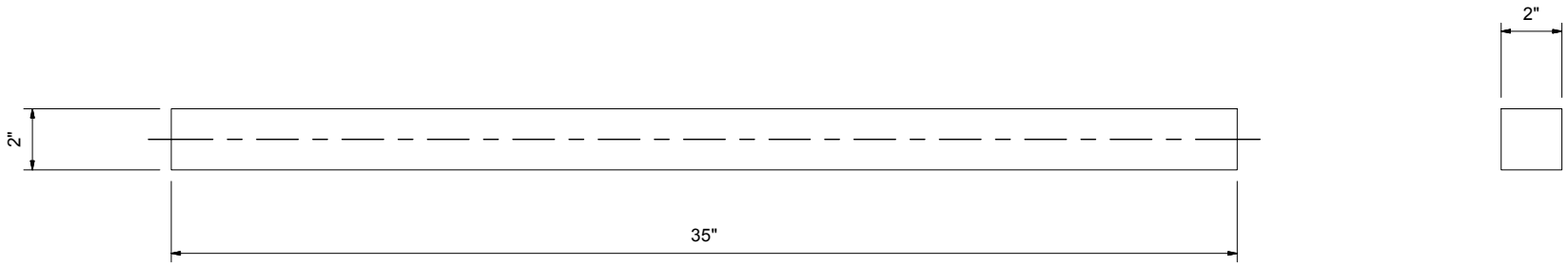

Foreman copy
Issued For Construction
Date 2014-12-19

TOLERANCES AS PER QMF-03

IF IN DOUBT.....ASK!

CUSTOMER REFERENCE

Ja-Co
Welding & Consulting Ltd.
1304-8th Street, Nisku, Alberta, T9E 7M1 phone 780 955 2251 fax 780 955 3433
email: ja-co@telusplanet.net website: jacoweld.com

CUSTOMER	Ja-Co	DRAWN bmurphy	DATE
PROJECT	BECKET HOLDER	CHECKED	DATE
TITLE	Becket Holder	APPROVED	DATE
W.O. # 15520	SCALE N.T.S.	DRAWING # / SHEET # eqt-1269-A-002 13 of 19	0

BILL OF MATERIALS						
MARK	STOCK #	DESCRIPTION	WIDTH	LENGTH	QTY	UNIT WEIGHT
2p8	100-02313	PL 50W - 1"	5"	1'- 1/2"	8	10.43

DXF FILE #15520108

MACHINE SHOP

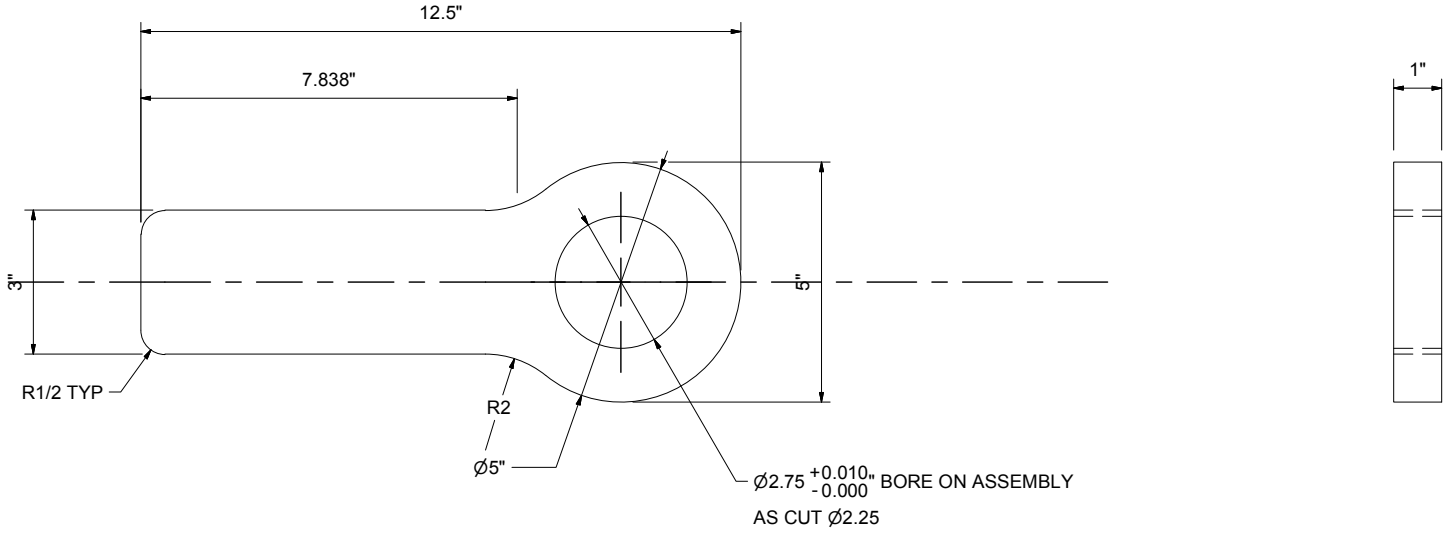

Foreman copy
Issued For Construction
Date 2014-12-19

TOLERANCES AS PER QMF-03

IF IN DOUBT.....ASK!

CUSTOMER REFERENCE

Ja-Co
Welding & Consulting Ltd.
1304-8th Street, Nisku, Alberta, T9E 7M1 phone 780 955 2251 fax 780 955 3433
email: ja-co@telusplanet.net website: jacoweld.com

CUSTOMER	Ja-Co	DRAWN bmurphy	DATE
PROJECT	BECKET HOLDER	CHECKED	DATE
TITLE	Becket Holder	APPROVED	DATE
W.O. # 15520	SCALE N.T.S.	DRAWING # / SHEET # eqt-1269-A-002 14 of 19	0

BILL OF MATERIALS						
MARK	STOCK #	DESCRIPTION	WIDTH	LENGTH	QTY	UNIT WEIGHT
2p9	100-02313	PL 50W - 1"	5 1/2"	8 5/8"	2	7.96

NOTE:
ALL SURFACES FLAME CUT

DXF FILE #15520109

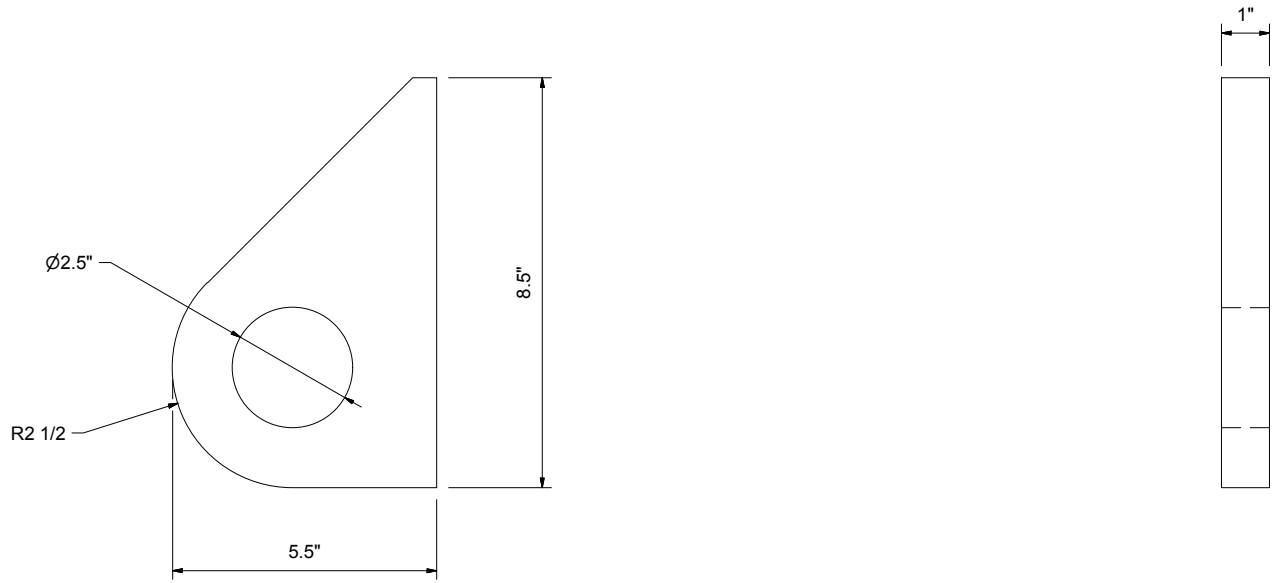

Foreman copy
Issued For Construction
Date 2014-12-19

TOLERANCES AS PER QMF-03

IF IN DOUBT.....ASK!

CUSTOMER REFERENCE

Ja-Co
Welding & Consulting Ltd.
1304-8th Street, Nisku, Alberta, T9E 7M1 phone 780 955 2251 fax 780 955 3433
email: ja-co@telusplanet.net website: jacoweld.com

CUSTOMER	Ja-Co	DRAWN bmurphy	DATE
PROJECT	BECKET HOLDER	CHECKED	DATE
TITLE	Becket Holder	APPROVED	DATE
W.O. # 15520	SCALE N.T.S.	DRAWING # / SHEET # eqt-1269-A-002 15 of 19	0

BILL OF MATERIALS						
MARK	STOCK #	DESCRIPTION	WIDTH	LENGTH	QTY	UNIT WEIGHT
2r1	100-02674	4140 4 1/2" (HTSR)		2'-6 1/2"	2	122.03

MACHINE SHOP

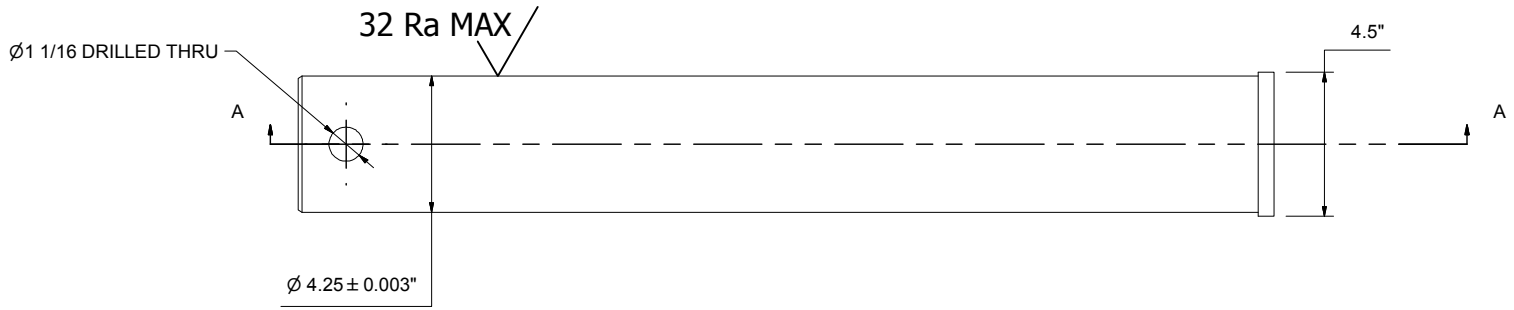

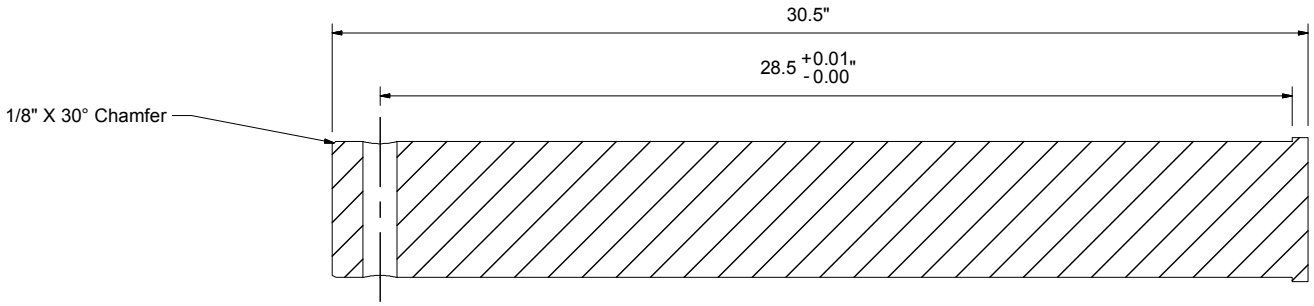

SECTION A-A
SCALE 1:6

Foreman copy
Issued For Construction
Date 2014-12-19

TOLERANCES AS PER QMF-03

IF IN DOUBT.....ASK!

CUSTOMER REFERENCE

Ja-Co
Welding & Consulting Ltd.
1304-8th Street, Nisku, Alberta, T9E 7M1 phone 780 955 2251 fax 780 955 3433
email: ja-co@telusplanet.net website: jacoweld.com

CUSTOMER	Ja-Co	DRAWN bmurphy	DATE
PROJECT	BECKET HOLDER	CHECKED	DATE
TITLE	Becket Holder	APPROVED	DATE
W.O. # 15520	SCALE N.T.S.	DRAWING # / SHEET # eqt-1269-A-002 16 of 19	0

BILL OF MATERIALS						
MARK	STOCK #	DESCRIPTION	WIDTH	LENGTH	QTY	UNIT WEIGHT
2r2	100-02663	4140 2 3/4" (HTSR)		8 3/16"	4	12.39

MACHINE SHOP

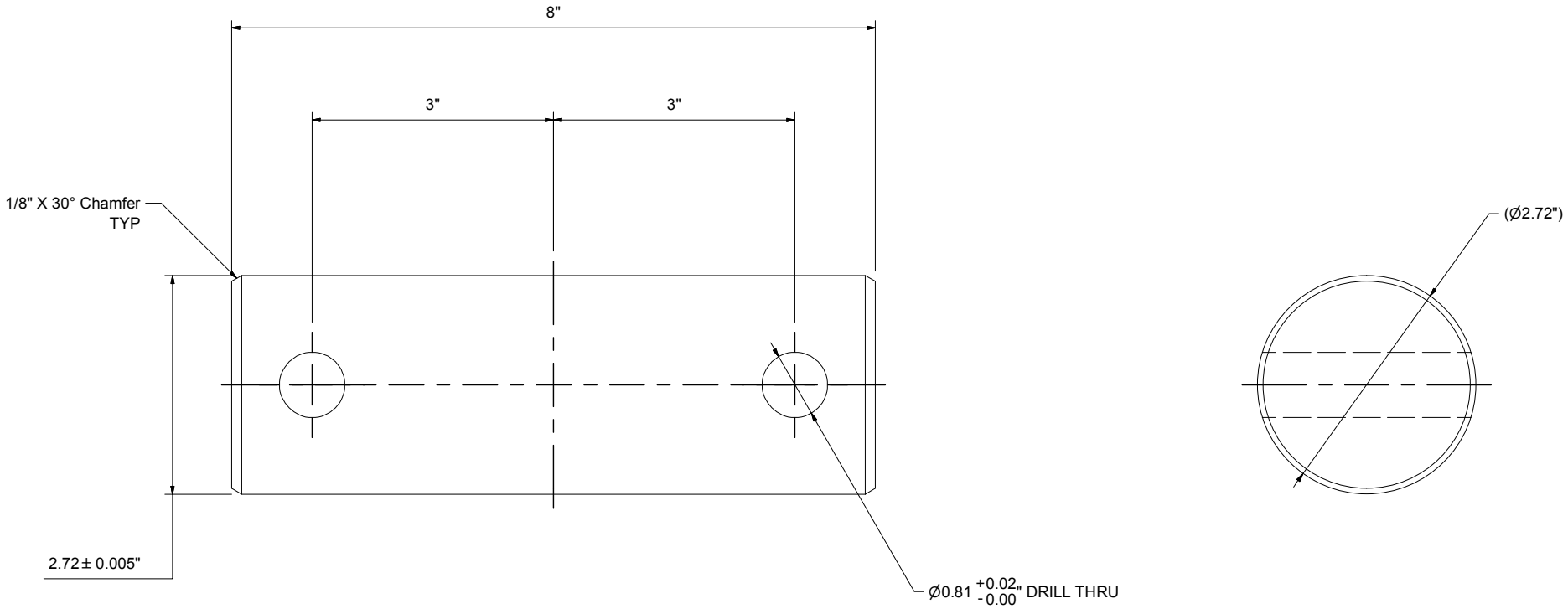

Foreman copy
Issued For Construction
Date 2014-12-19

TOLERANCES AS PER QMF-03

IF IN DOUBT.....ASK!

CUSTOMER REFERENCE

Ja-Co
Welding & Consulting Ltd.
1304-8th Street, Nisku, Alberta, T9E 7M1 phone 780 955 2251 fax 780 955 3433
email: ja-co@telusplanet.net website: jacoweld.com

CUSTOMER	Ja-Co	DRAWN bmurphy	DATE
PROJECT	BECKET HOLDER	CHECKED	DATE
TITLE	Becket Holder	APPROVED	DATE
W.O. # 15520	SCALE N.T.S.	DRAWING # / SHEET # eqt-1269-A-002 17 of 19	0

BILL OF MATERIALS						
MARK	STOCK #	DESCRIPTION	WIDTH	LENGTH	QTY	UNIT WEIGHT
2z1	100-02329	MECHANICAL TUBE - 5"od x 4.124"id (C1026)		3"	2	4.32

MACHINE SHOP

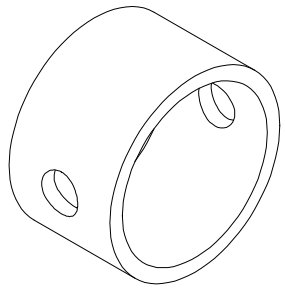

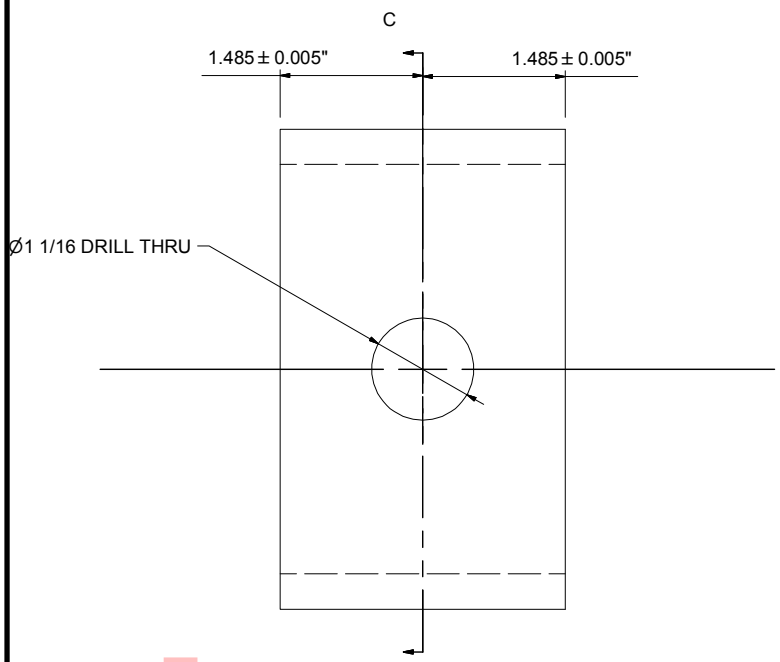

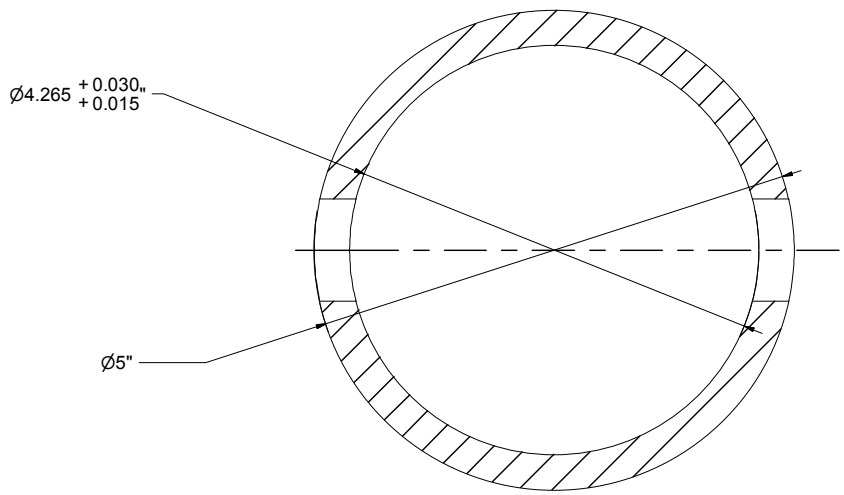

SECTION C-C
SCALE 1 / 2

Foreman copy
Issued For Construction
Date 2014-12-19

TOLERANCES AS PER QMF-03

IF IN DOUBT.....ASK!

CUSTOMER REFERENCE

Ja-Co
Welding & Consulting Ltd.
1304-8th Street, Nisku, Alberta, T9E 7M1 phone 780 955 2251 fax 780 955 3433
email: ja-co@telusplanet.net website: jacoweld.com

CUSTOMER	Ja-Co	DRAWN bmurphy	DATE
PROJECT	BECKET HOLDER	CHECKED	DATE
TITLE	Becket Holder	APPROVED	DATE
W.O. # 15520	SCALE N.T.S.	DRAWING # / SHEET # eqt-1269-A-002 18 of 19	0

BILL OF MATERIALS						
MARK	STOCK #	DESCRIPTION	WIDTH	LENGTH	QTY	UNIT WEIGHT
2z2	100-02318	KEY STOCK - 3/4"		9"	4	0.18

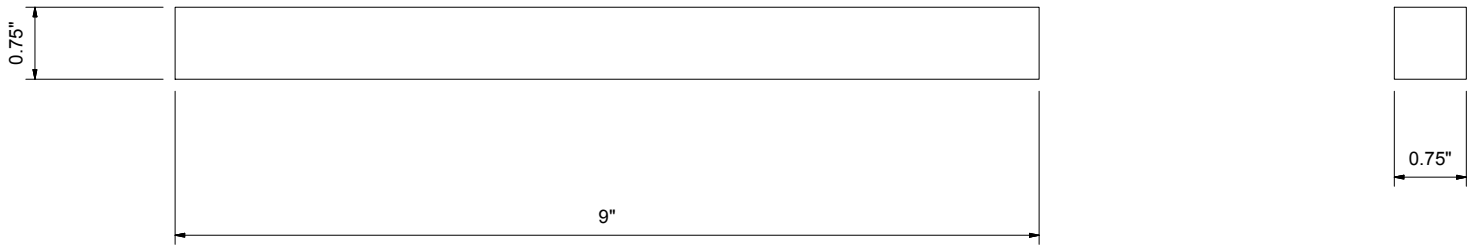

Foreman copy
Issued For Construction
Date 2014-12-19

TOLERANCES AS PER QMF-03

IF IN DOUBT.....ASK!

CUSTOMER REFERENCE

Ja-Co
Welding & Consulting Ltd.
1304-8th Street, Nisku, Alberta, T9E 7M1 phone 780 955 2251 fax 780 955 3433
email: ja-co@telusplanet.net website: jacoweld.com

CUSTOMER	Ja-Co	DRAWN bmurphy	DATE
PROJECT	BECKET HOLDER	CHECKED	DATE
TITLE	Becket Holder	APPROVED	DATE
W.O. # 15520	SCALE N.T.S.	DRAWING # / SHEET # eqt-1269-A-002 19 of 19	0