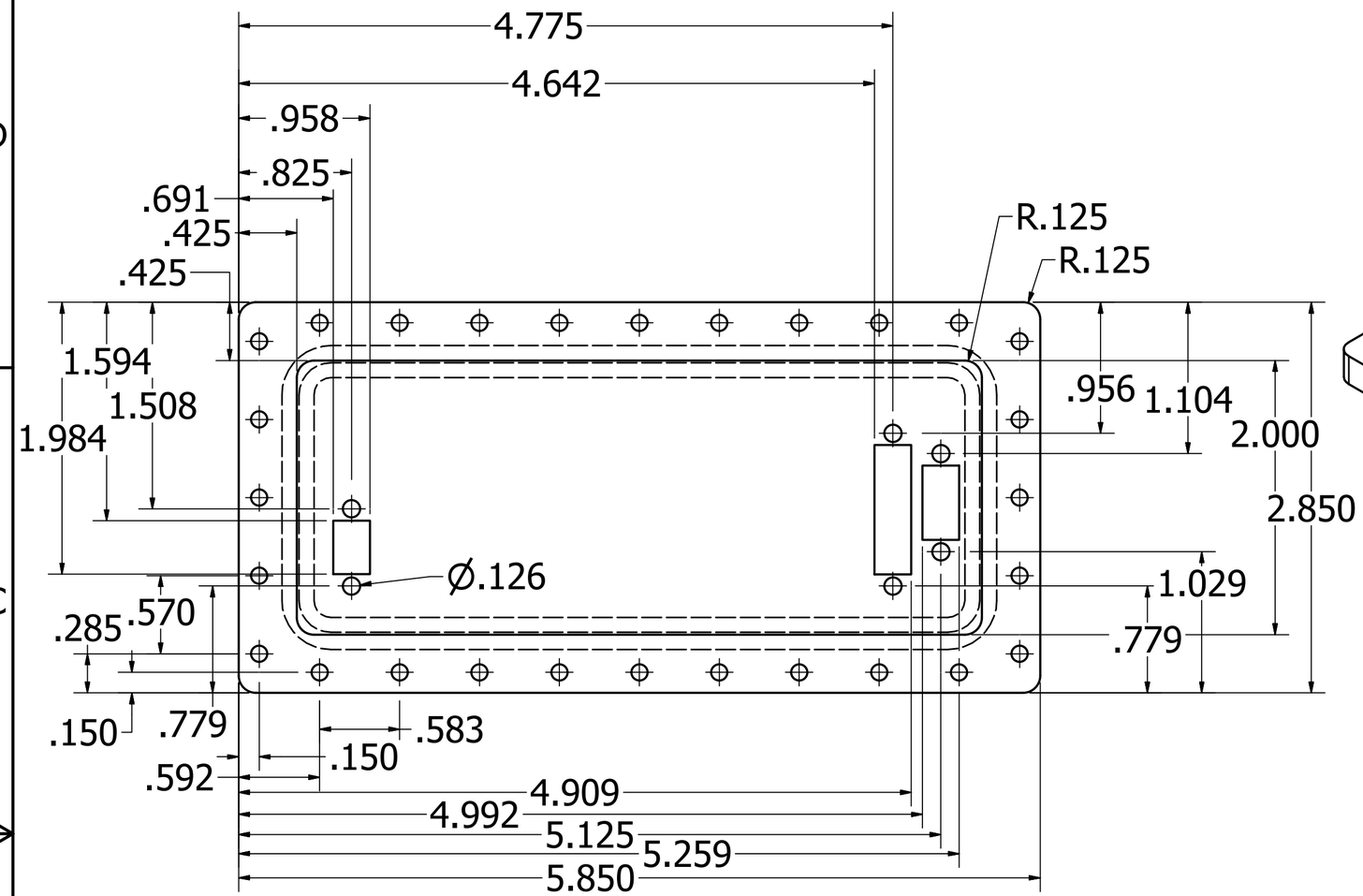

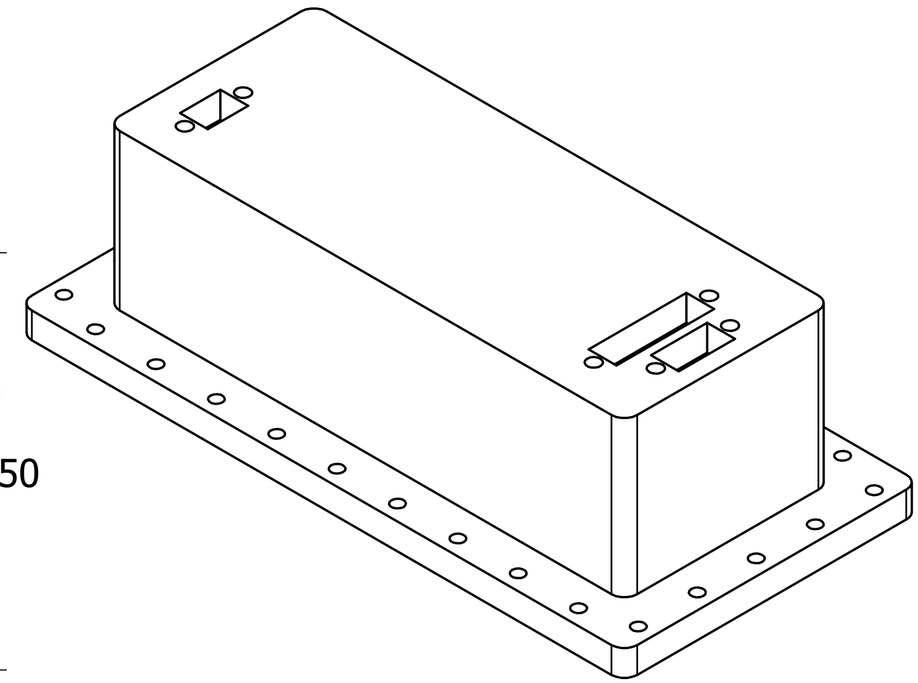

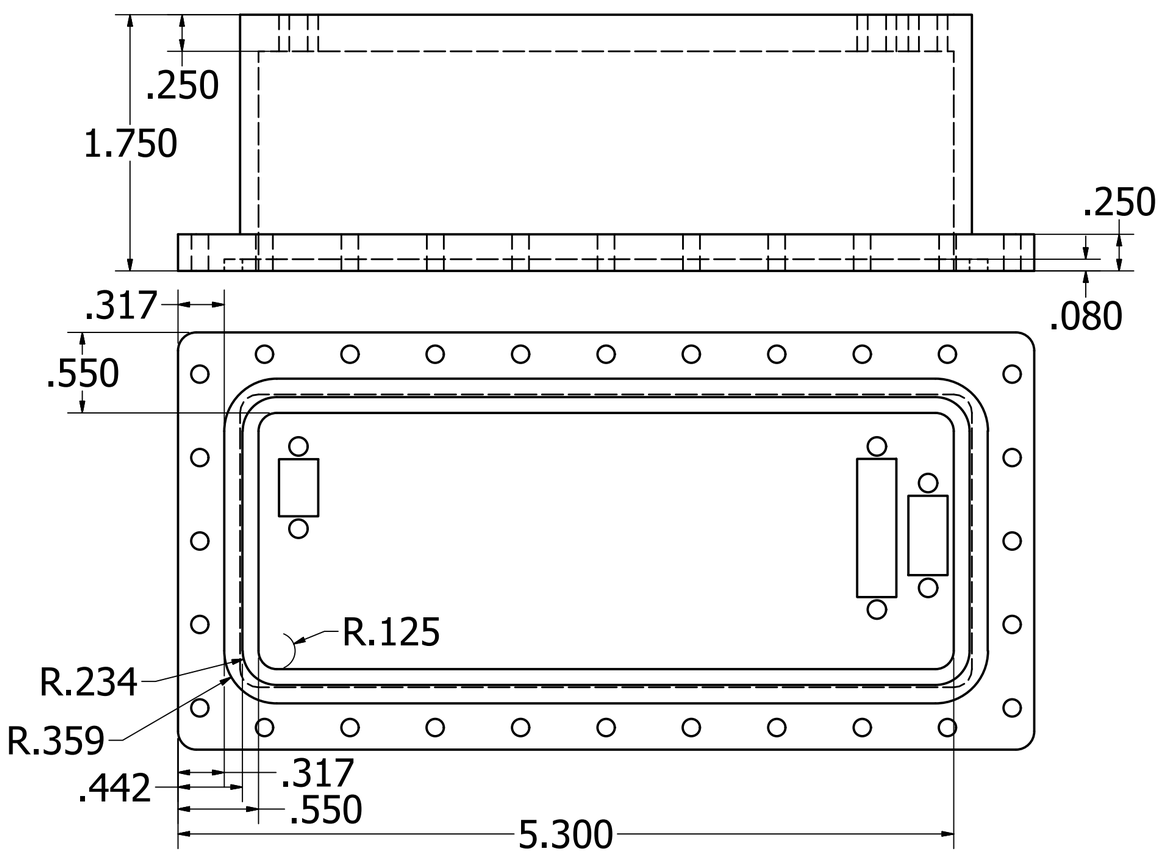

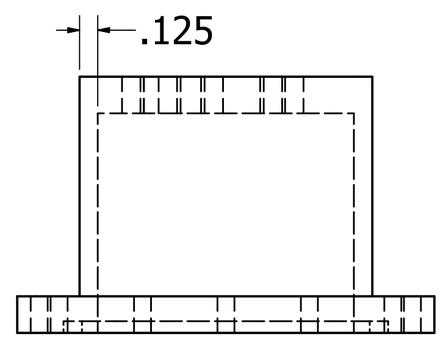

DRAWN qupec	3/2/2017	
CHECKED		TITLE
QA		
MFG		
APPROVED		
		SIZE C / DWG NO Electronics Box / REV
		SCALE 1.25 : 1 / SHEET 1 OF 1