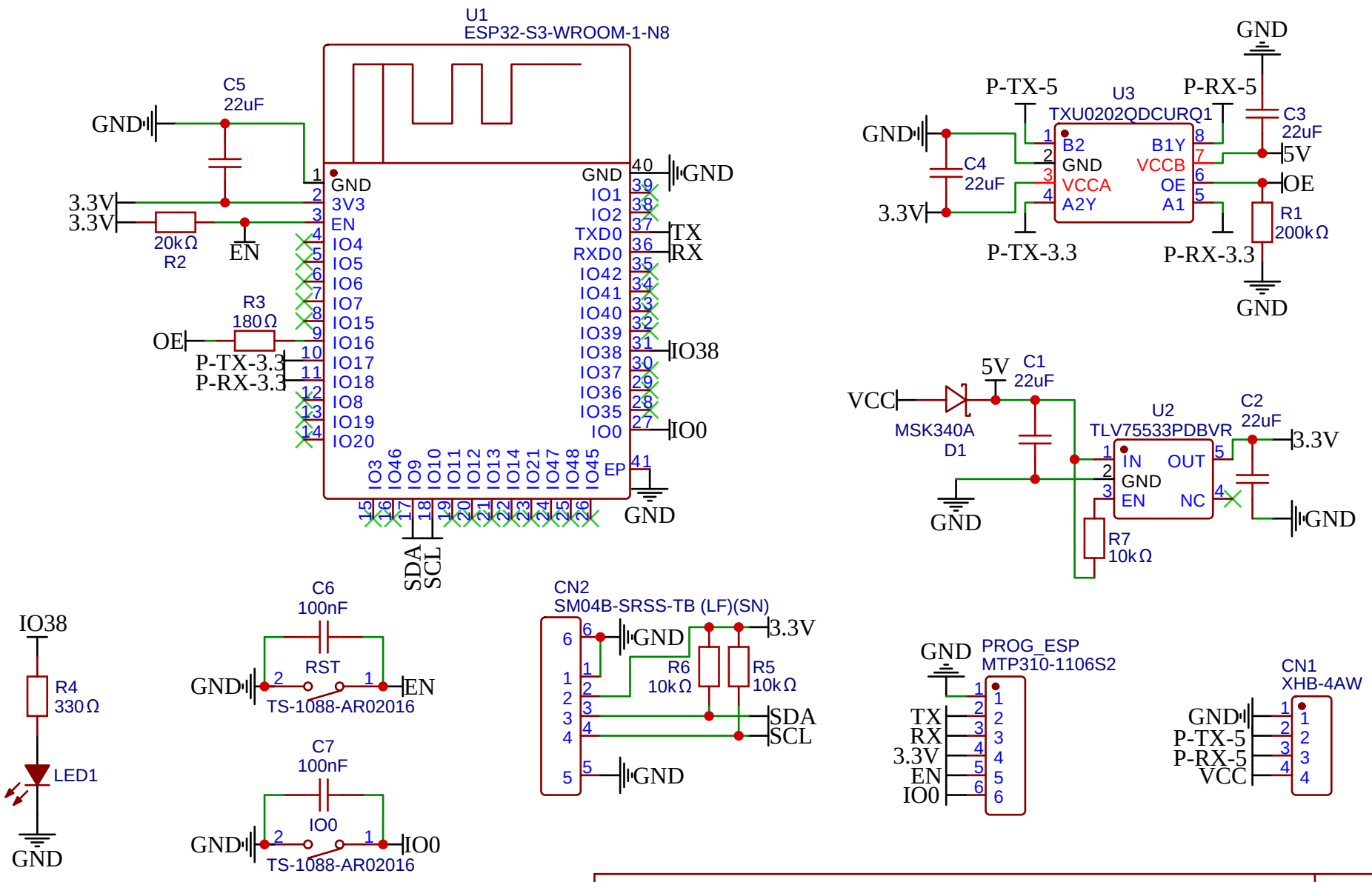

TITLE: AirControl-Mini	REV: 2
Company:	Sheet: 1/1
Date: 2024-08-13 Drawn By: Zhhi	