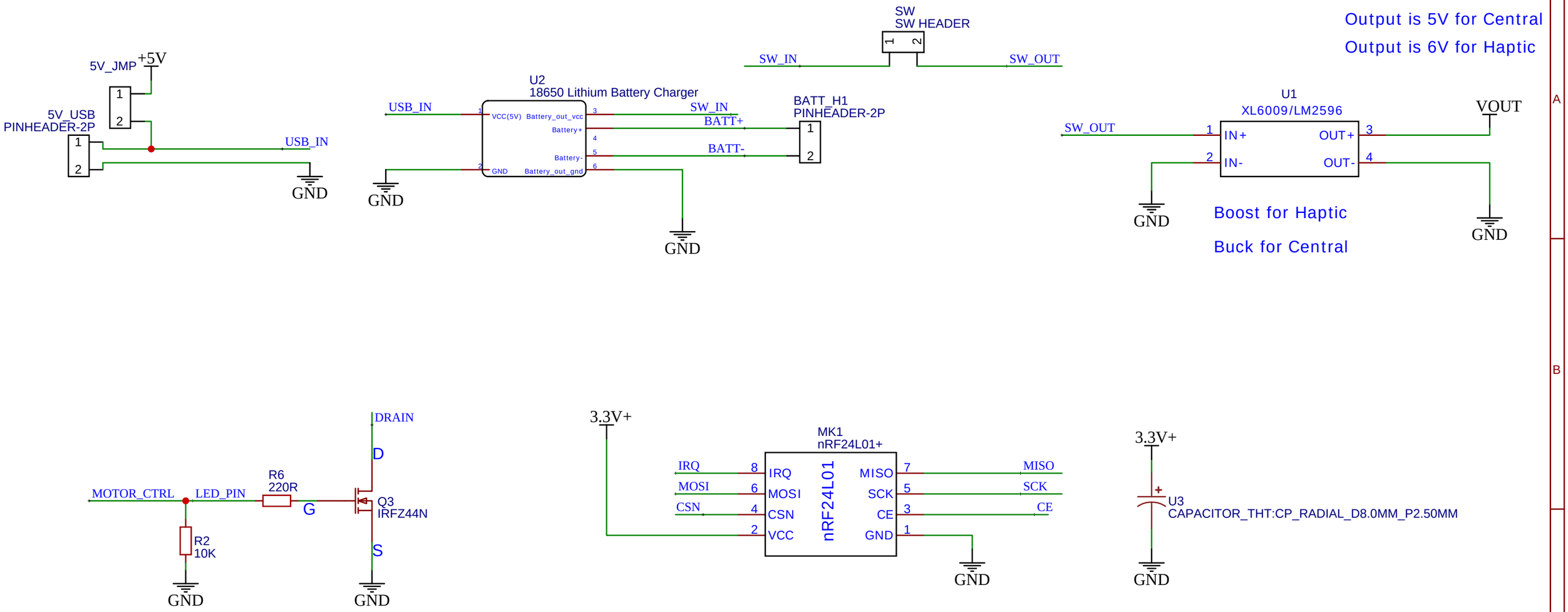

TITLE: Common Circuit		REV: 1.0
EasyEDA	Company: StreetSmart	Sheet: 1/1
	Date: 2024-01-03 Drawn By: yixingqie	

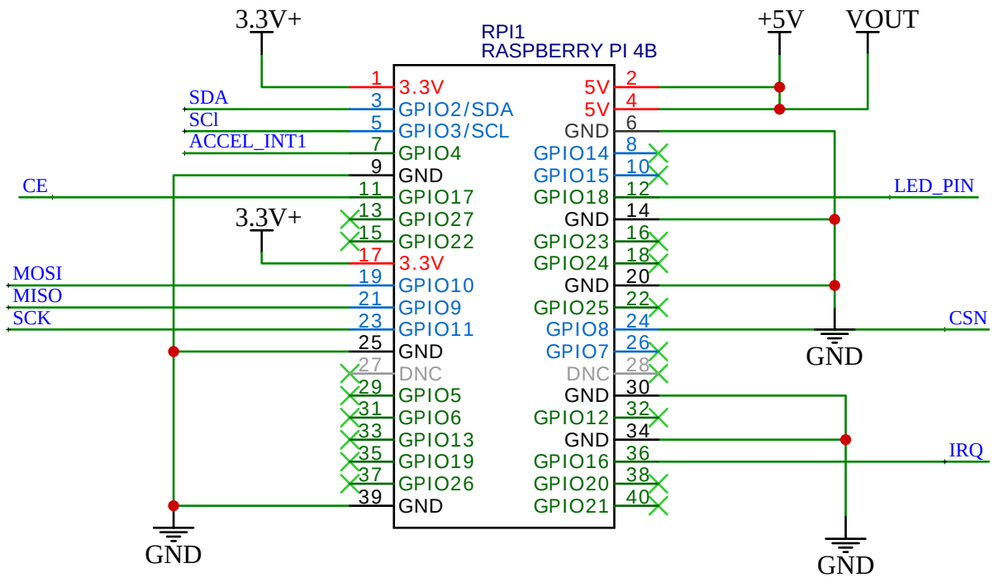

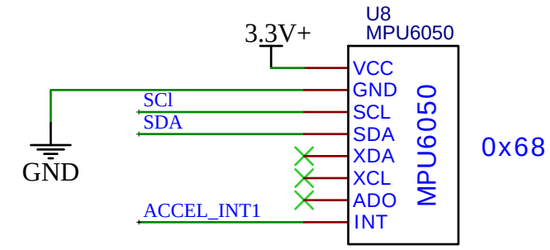

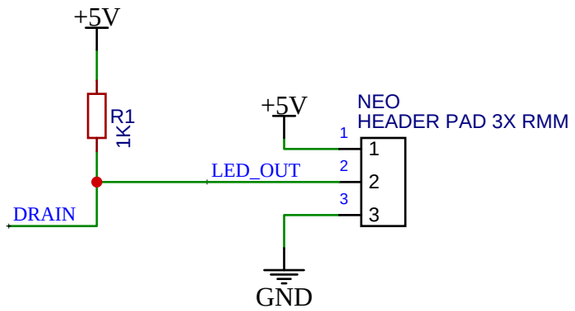

TITLE: Central Controller		REV: 1.0
EasyEDA	Company: StreetSmart	Sheet: 1/1
	Date: 2023-12-29 Drawn By: yixingqie	

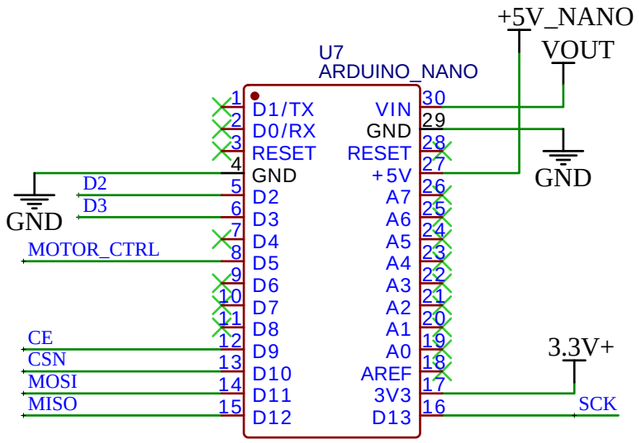

Place diode very close to Motors

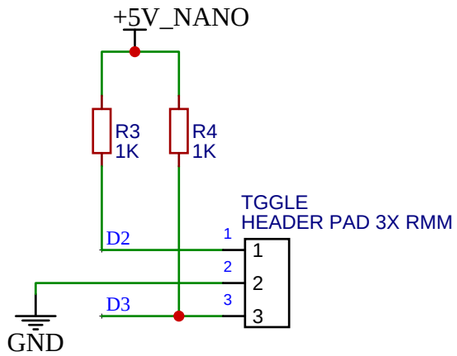

TITLE: Haptic Controller		REV: 1.0
EasyEDA	Company: StreetSmart	Sheet: 1/1
	Date: 2023-12-29 Drawn By: yixingqie	