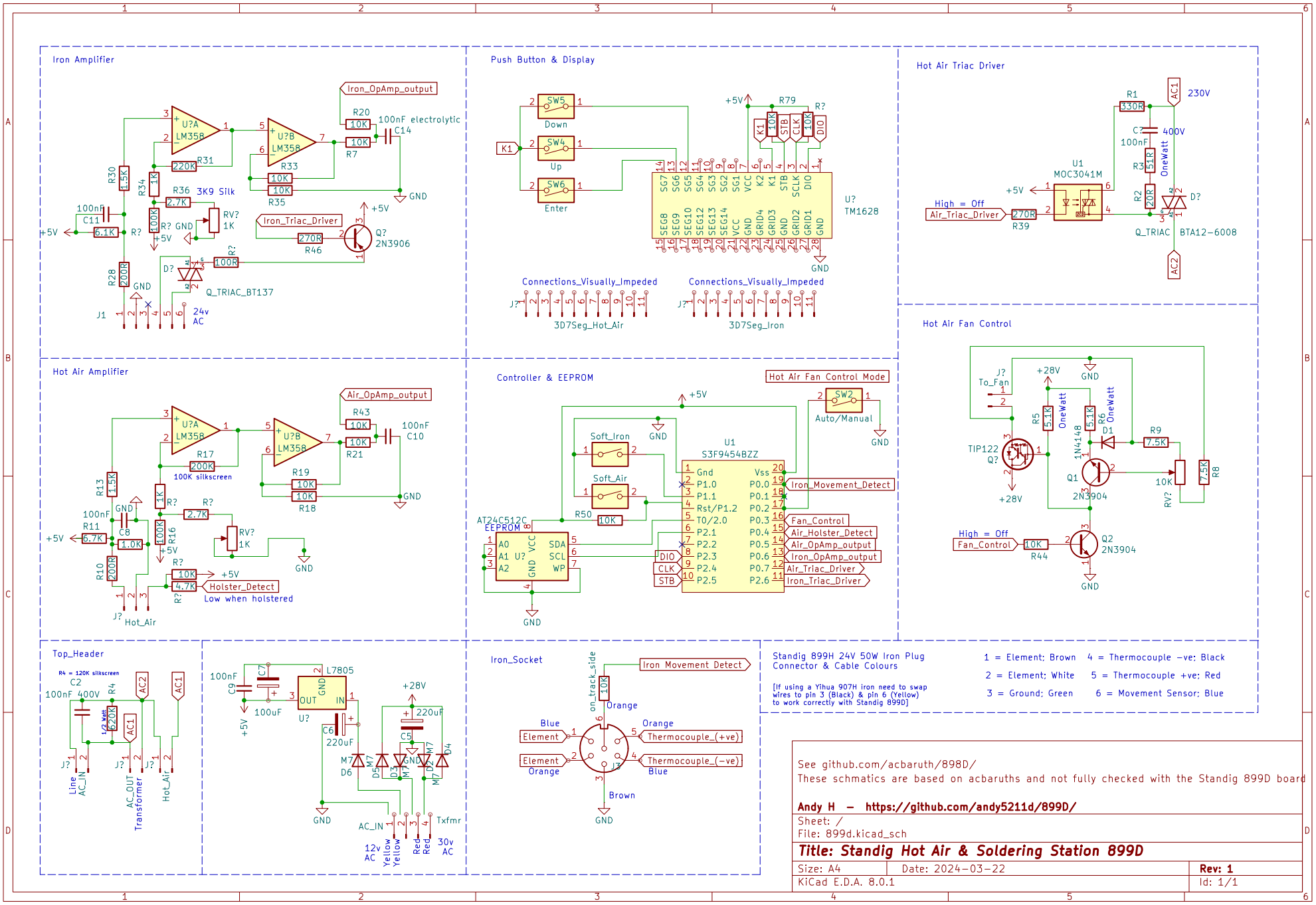
Iron Amplifier
Iron_OpAmp_output
U?A LM358
U?B LM358
R20 10K
R7 10K
100nF electrolytic C14
R33 10K
R35 10K
R30 1.5K
R34 1K
R31 220K
R36 2.7K
3K9 Silk
RV? 1K
100nF C11
6.1K R?
R28 200R
R? 100R
D?
Q_TRIAC_BT137
Iron_Triac_Driver
R46 270R
Q? 2N3906
+5V
GND
J1
24v AC
Push Button & Display
SW5 Down
SW4 Up
SW6 Enter
K1
R79 10K
STB 10K
CLK 10K
DIO 10K
U? TM1628
Connections_Visually_Impeded
3D7Seg_Hot_Air
3D7Seg_Iron
Hot Air Triac Driver
R1 330R
C? 100nF
400V
OneWatt
R3 51R
R2 20R
D?
U1 MOC3041M
High = Off
Air_Triac_Driver
R39 270R
Q_TRIAC
BTA12-6008
AC1
AC2
230V
Hot Air Amplifier
Air_OpAmp_output
R43 10K
R21 10K
100nF C10
R17 200K
100K silkscreen
R19 10K
R18 10K
R13 1.5K
R? 1K
R? 2.7K
RV? 1K
100nF C8
R11 6.7K
1.0K
R16 100K
R10 200R
R? 10K
4.7K
Holster_Detect
Low when holstered
J? Hot_Air
Controller & EEPROM
Hot Air Fan Control Mode
SW2 Auto/Manual
Soft_Iron
Soft_Air
R50 10K
U1 S3F9454BZZ
Gnd
P1.0
P1.1
Rst/P1.2
T0/2.0
P2.1
P2.2
P2.3
P2.4
P2.5
Vss
P0.0
P0.1
P0.2
P0.3
P0.4
P0.5
P0.6
P0.7
P2.6
Iron_Movement_Detect
Fan_Control
Air_Holster_Detect
Air_OpAmp_output
Iron_OpAmp_output
Air_Triac_Driver
Iron_Triac_Driver
AT24C512C EEPROM
A0
A1
A2
VCC
SDA
SCL
WP
DIO
CLK
STB
Hot Air Fan Control
J? To_Fan
+28V
R5 5.1K
R6 5.1K
1N4148 D1
R9 7.5K
TIP122 Q?
Q1 2N3904
10K RV?
7.5K R8
High = Off
Fan_Control
R44 10K
Q2 2N3904
Top_Header
R4 = 120K silkscreen
C2 100nF 400V
R4 620K
1/2 Watt
J? Line AC_IN
J? AC_OUT Transformer
J? Hot_Air
L7805
C9 100nF
C7 100uF
U?
C6 220uF
C5 220uF
+28V
M7 D6
D5 M7
D3 M7
D2 M7
D4
AC_IN
12v AC
Yellow
Yellow
Red
Red
30v AC
Txfmr
Iron_Socket
Iron Movement Detect
on_track_side
10K
Orange
Blue
Element
Element
Orange
Orange
Thermocouple_(+ve)
Thermocouple_(-ve)
Blue
Brown
J3
Standig 899H 24V 50W Iron Plug Connector & Cable Colours
[If using a Yihua 907H iron need to swap wires to pin 3 (Black) & pin 6 (Yellow) to work correctly with Standig 899D]
1 = Element; Brown
2 = Element; White
3 = Ground; Green
4 = Thermocouple −ve; Black
5 = Thermocouple +ve; Red
6 = Movement Sensor; Blue
See github.com/acbaruth/898D/
These schmatics are based on acbaruths and not fully checked with the Standig 899D board
Andy H – https://github.com/andy5211d/899D/
Sheet: /
File: 899d.kicad_sch
Title: Standig Hot Air & Soldering Station 899D
Size: A4
Date: 2024-03-22
Rev: 1
KiCad E.D.A. 8.0.1
Id: 1/1