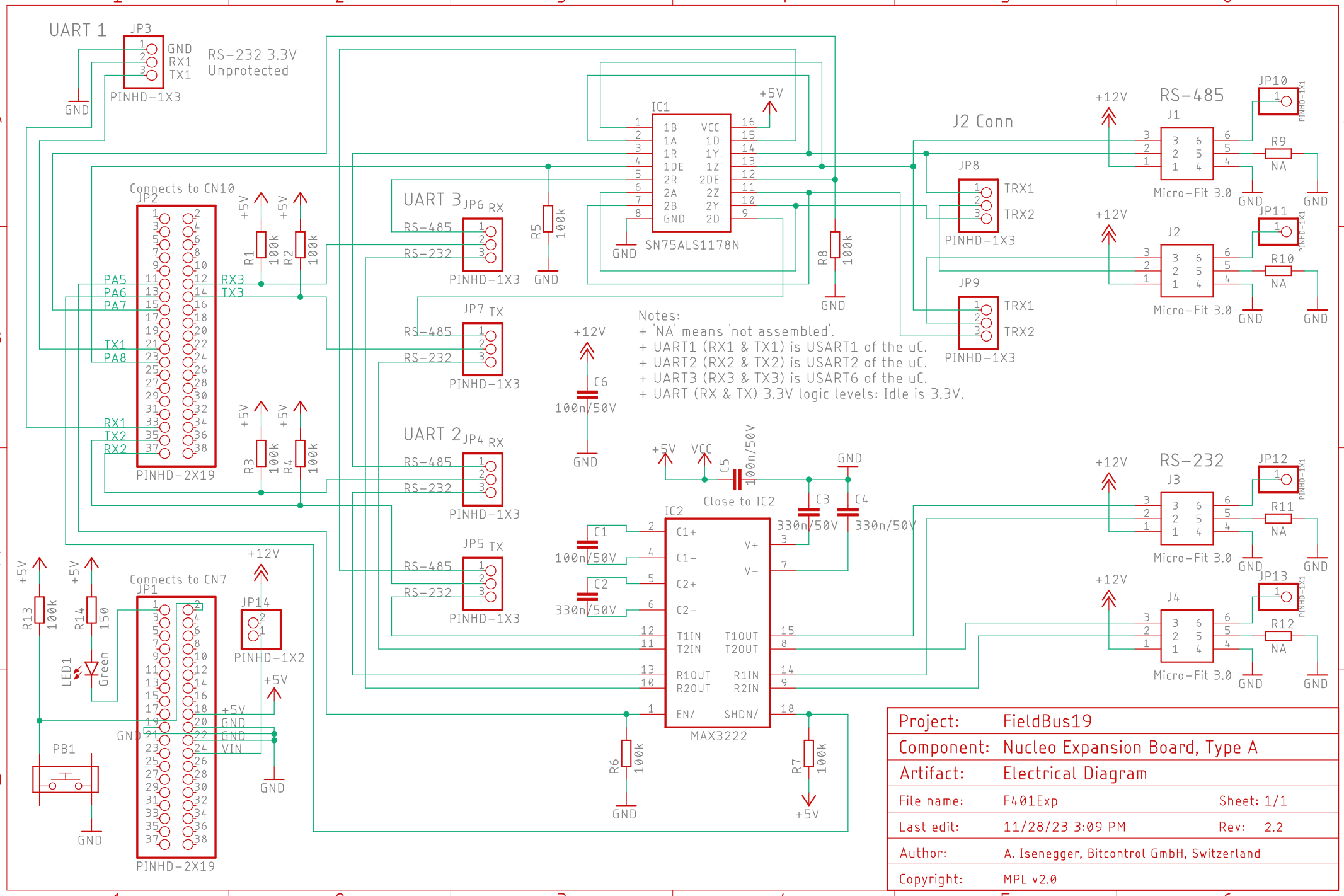
UART 1
JP3
GND
RX1
TX1
RS-232 3.3V
Unprotected
PINHD-1X3
Connects to CN10
JP2
PINHD-2X19
PA5
PA6
PA7
TX1
PA8
RX1
TX2
RX2
RX3
TX3
R1 100k
R2 100k
R3 100k
R4 100k
UART 3 JP6 RX
RS-485
RS-232
PINHD-1X3
R5 100k
IC1
SN75ALS1178N
1B
1A
1R
1DE
2R
2A
2B
GND
VCC
1D
1Y
1Z
2DE
2Z
2Y
2D
+5V
R8 100k
J2 Conn
JP8
TRX1
TRX2
JP9
+12V
RS-485
J1
J2
Micro-Fit 3.0
JP10
JP11
R9 NA
R10 NA
JP7 TX
C6 100n/50V
Notes:
+ 'NA' means 'not assembled'.
+ UART1 (RX1 & TX1) is USART1 of the uC.
+ UART2 (RX2 & TX2) is USART2 of the uC.
+ UART3 (RX3 & TX3) is USART6 of the uC.
+ UART (RX & TX) 3.3V logic levels: Idle is 3.3V.
UART 2 JP4 RX
JP5 TX
VCC
C5 100n/50V
Close to IC2
C3 330n/50V
C4 330n/50V
C1 100n/50V
C2 330n/50V
IC2
C1+
C1-
C2+
C2-
V+
V-
T1IN
T2IN
R1OUT
R2OUT
T1OUT
T2OUT
R1IN
R2IN
EN/
SHDN/
MAX3222
R6 100k
R7 100k
RS-232
J3
J4
JP12
JP13
R11 NA
R12 NA
R13 100k
R14 150
LED1
Green
Connects to CN7
JP1
JP14
PINHD-1X2
PB1
VIN
Project: FieldBus19
Component: Nucleo Expansion Board, Type A
Artifact: Electrical Diagram
File name: F401Exp
Sheet: 1/1
Last edit: 11/28/23 3:09 PM
Rev: 2.2
Author: A. Isenegger, Bitcontrol GmbH, Switzerland
Copyright: MPL v2.0