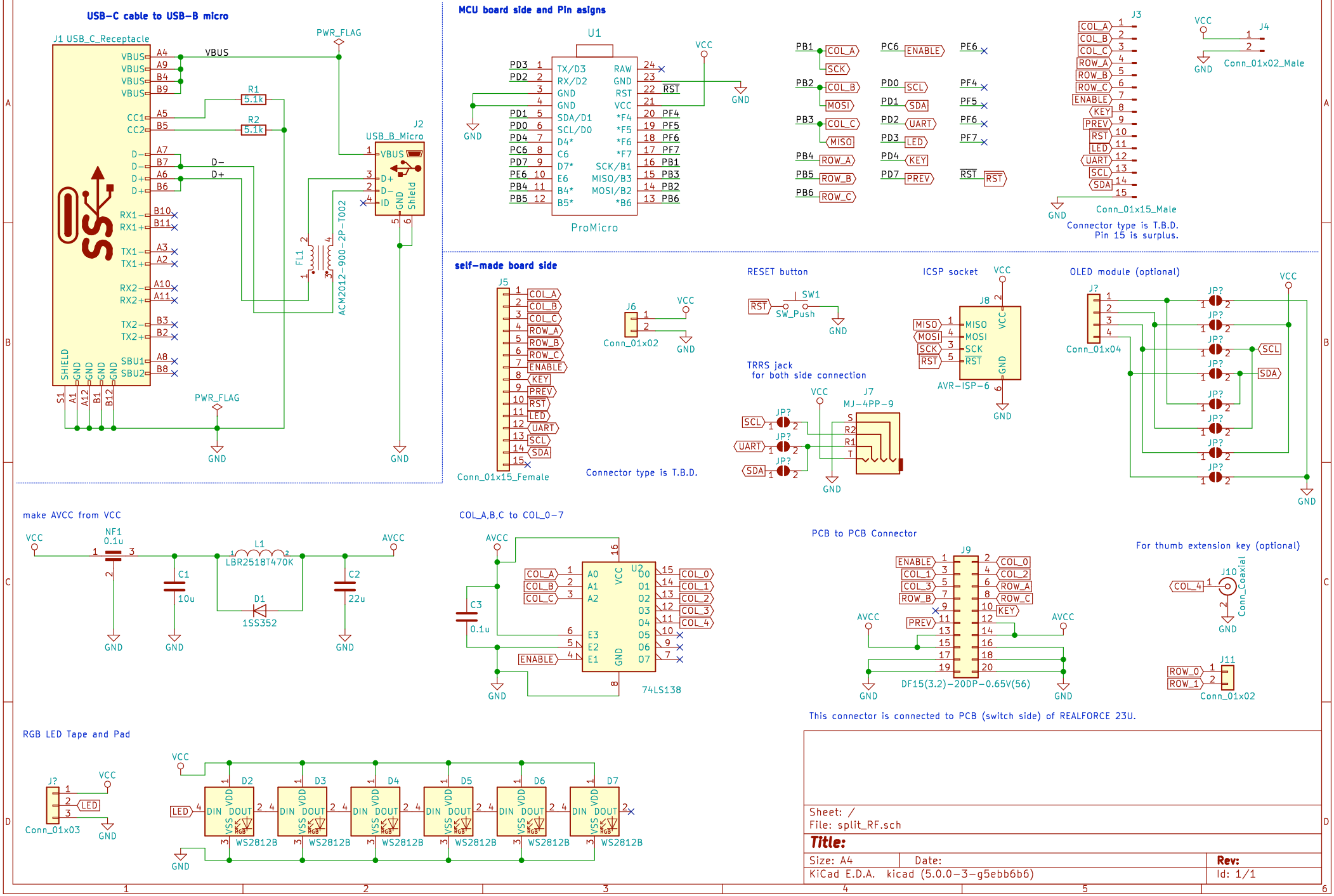

Sheet: /
File: split_RF.sch

Title:

Size: A4	Date:	Rev:
KiCad E.D.A. kicad (5.0.0-3-g5ebb6b6)		Id: 1/1