Amiga KickSmash 32 - In-system smart flash EEPROM

Rev 10 2026-06-29

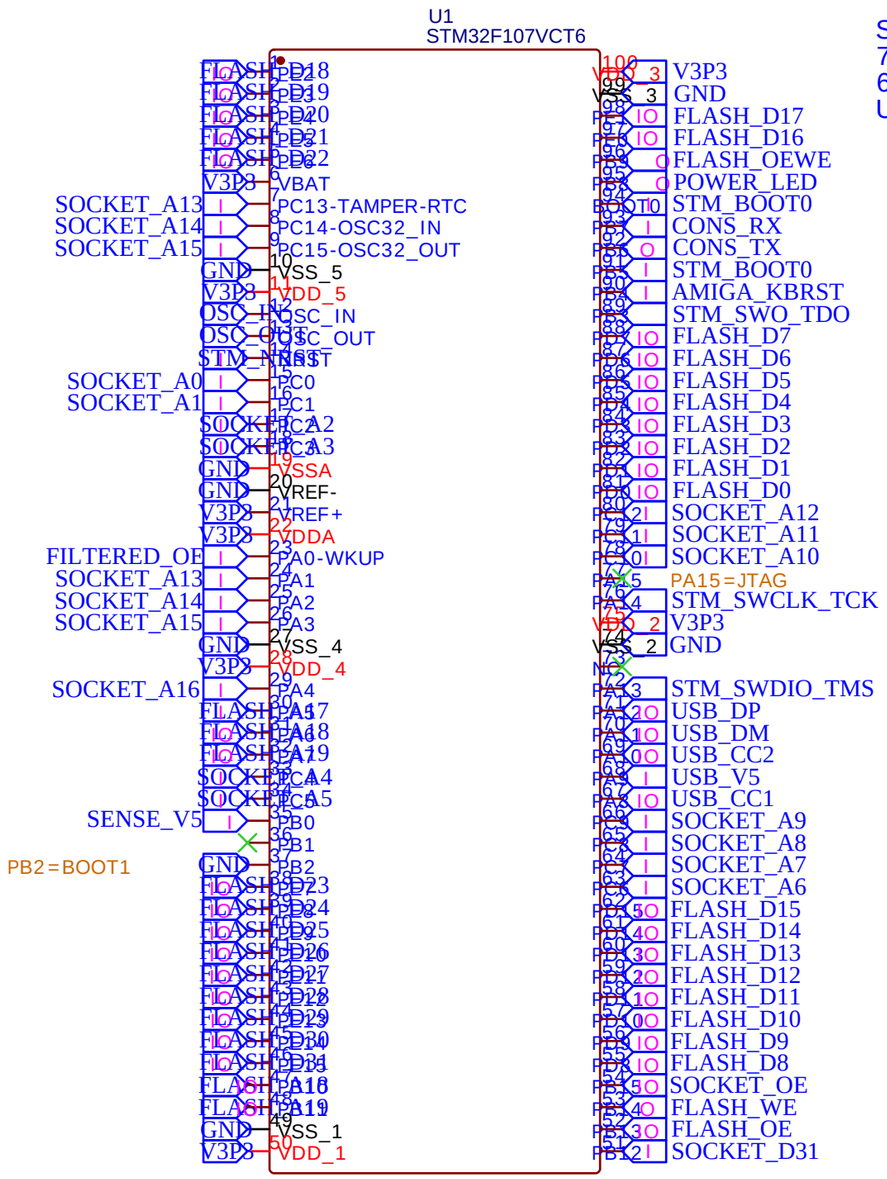

STM32F107VCT6
72 MHz 32-bit ARM Cortex-M3
64 KB SRAM, 256KB Flash,
USB, ADC, USART, Timer

107 = Connectivity
V = 100 pins
C = 256 KB flash
T = LQFP
6 = −40 to 85 °C
7 = −40 to 105 °C

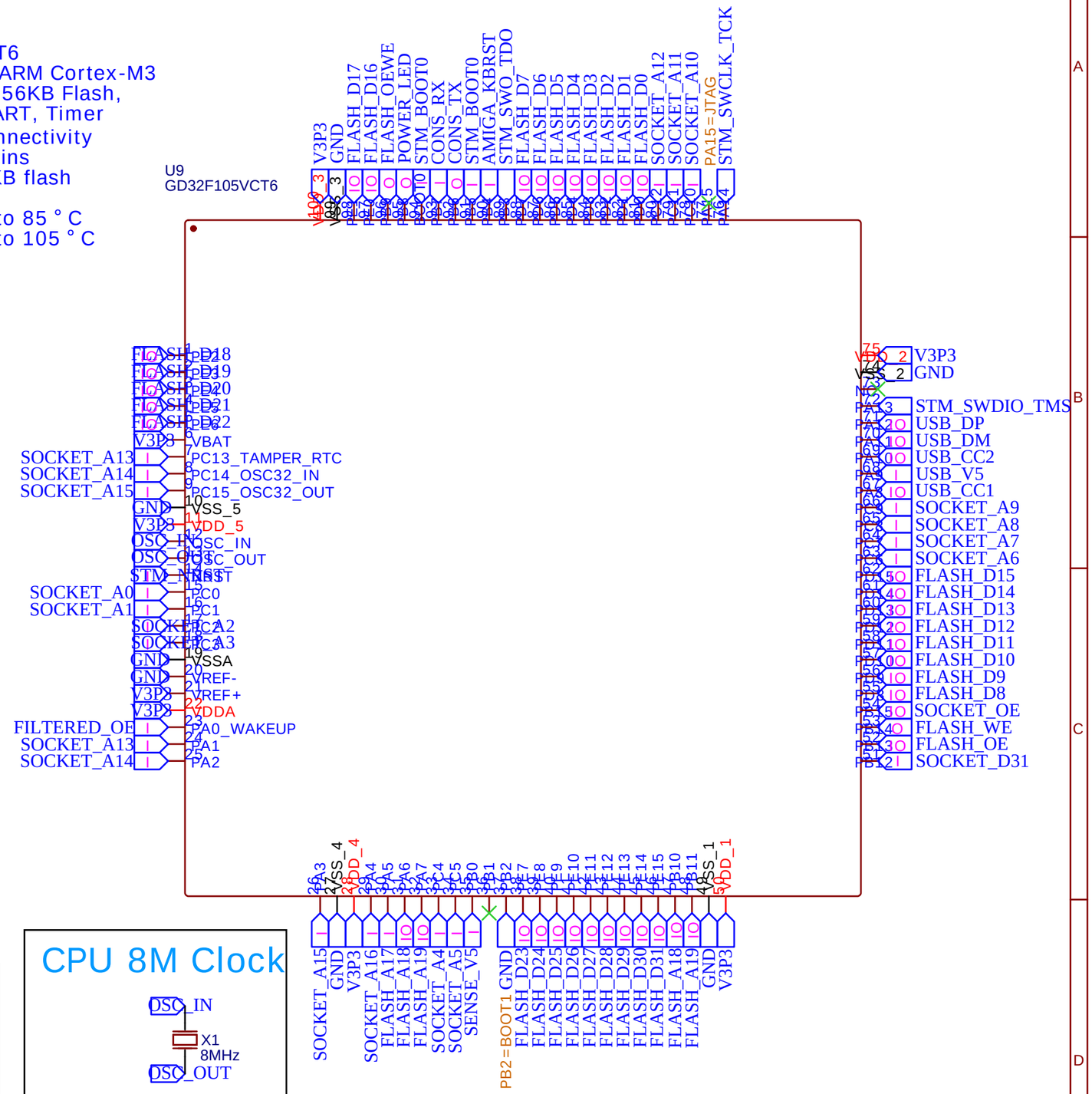

Program and debug

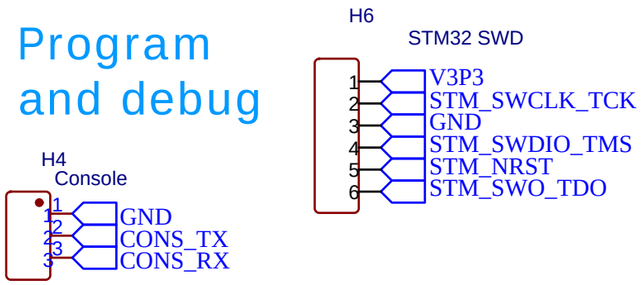

DFU

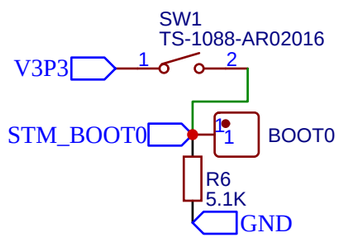

CPU 8M Clock

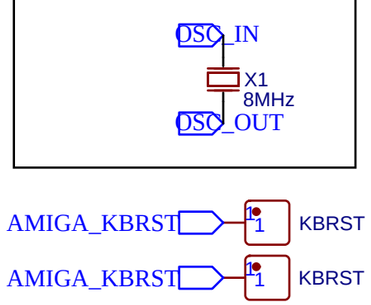

TITLE: STM32	REV: 10.0
Company: eebugs.com	Sheet: 1/4
Date: 2026-06-29 Drawn By: cdhooper	

EasyEDA

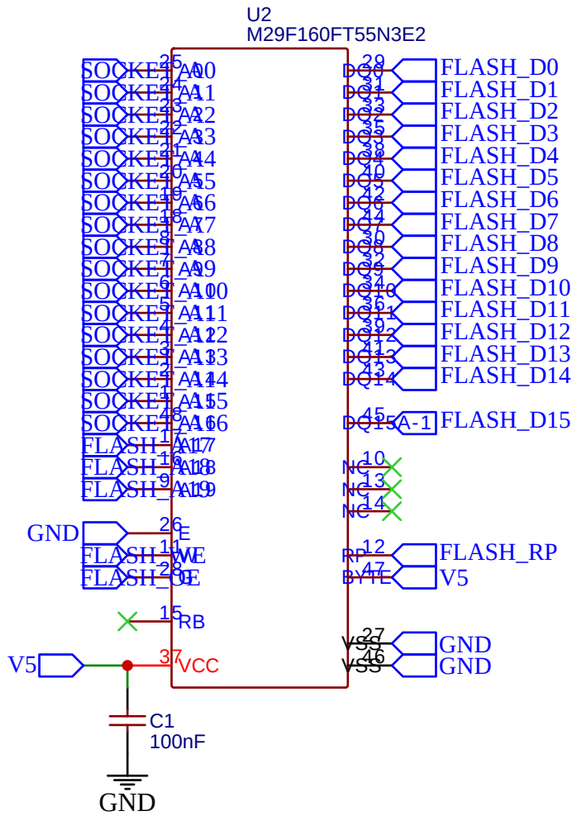

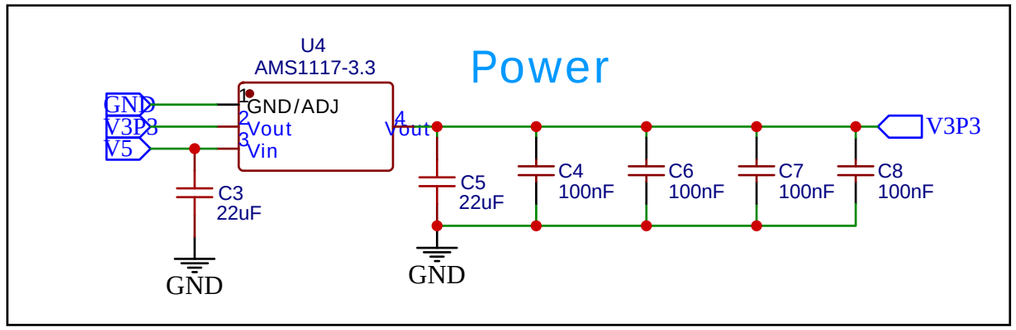

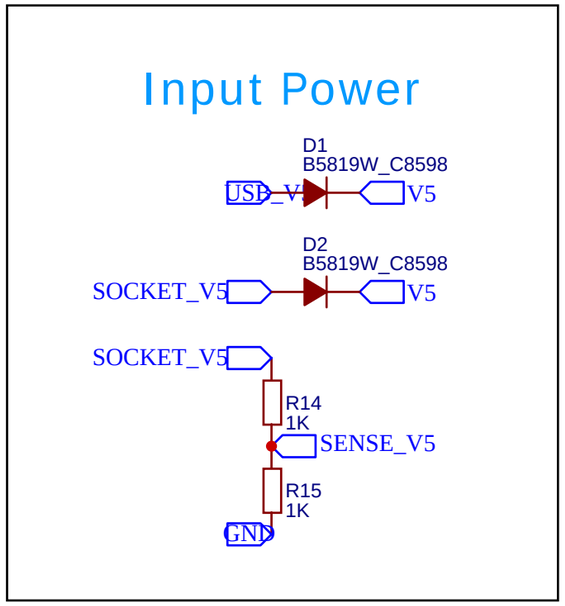

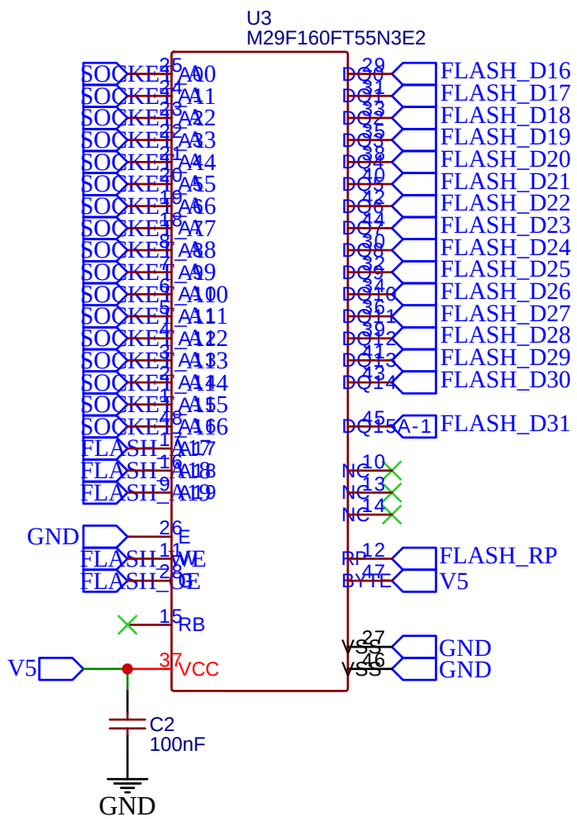

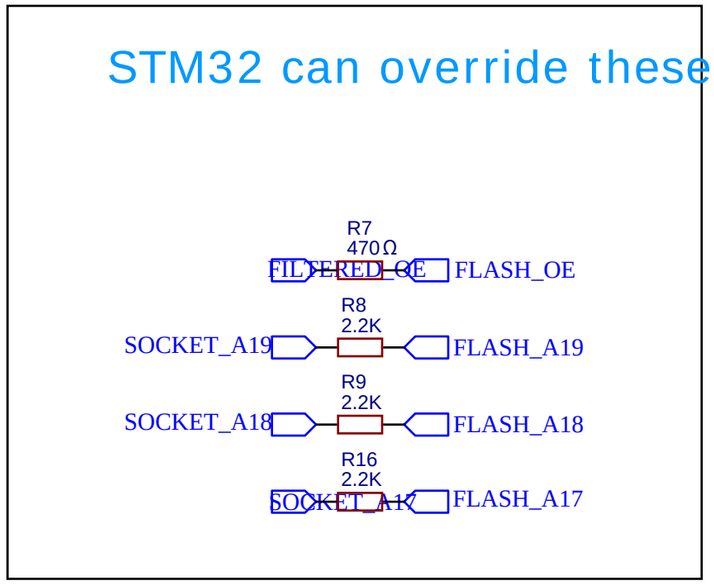

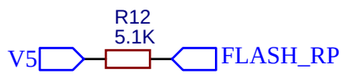

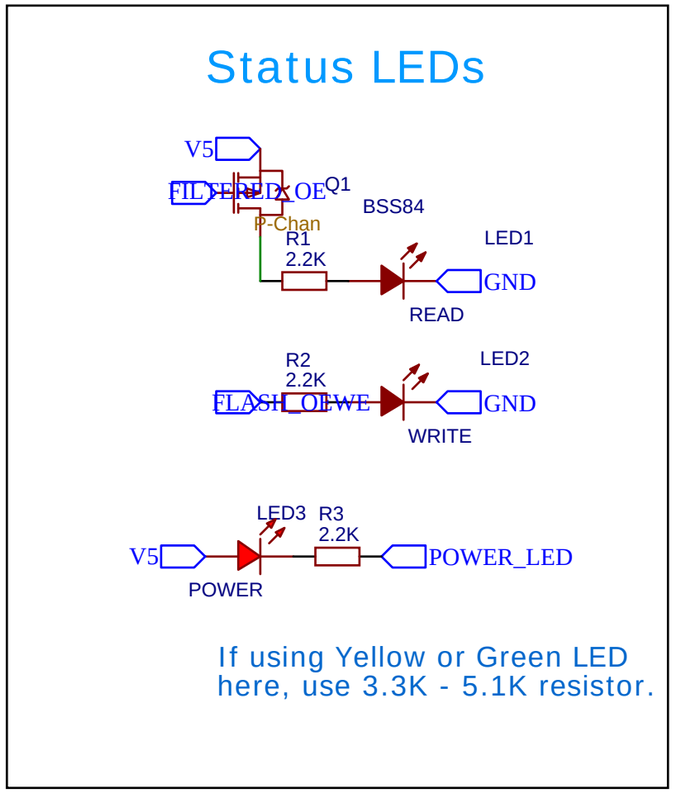

TITLE: Flash + Power	REV: 10.0
Company: eebugs.com	Sheet: 2/4
Date: 2026-06-29 Drawn By: cdhooper	

EasyEDA

Bus drivers are used to decouple STM32 putting response and flash write data on the bus from when the Amiga CPU does a read.

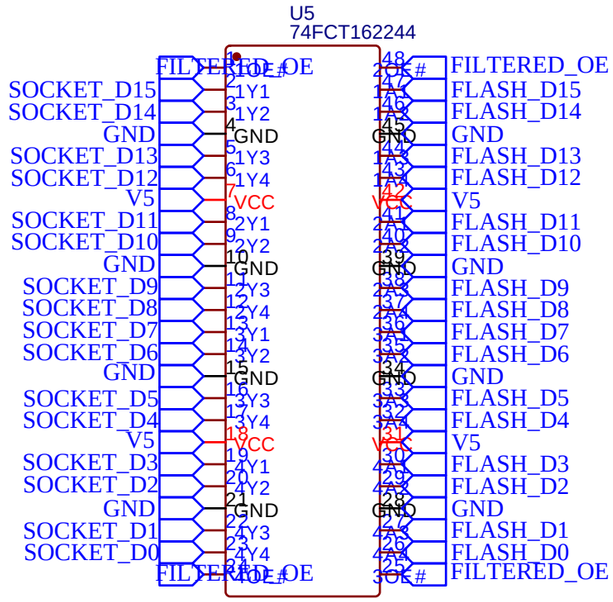

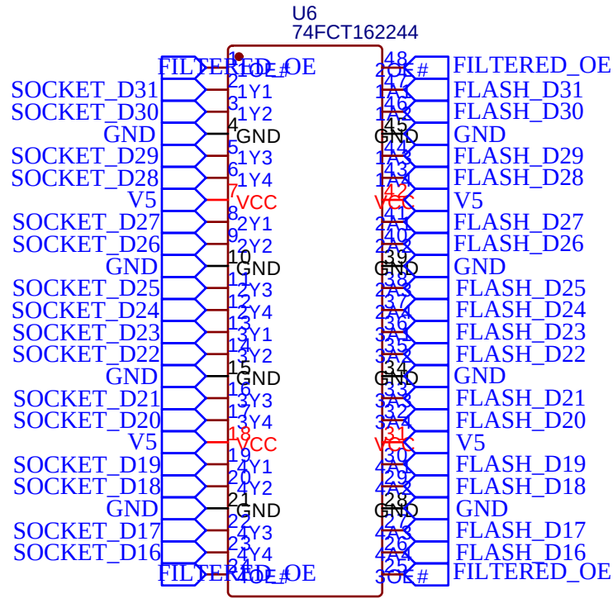

When FLASH_OEWE is high, FLASH_WE will be driven low when SOCKET_OE is low. Otherwise, FLASH_WE is managed by the STM32. This will allow the Amiga CPU to terminate a flash command write at the end of a bus cycle.

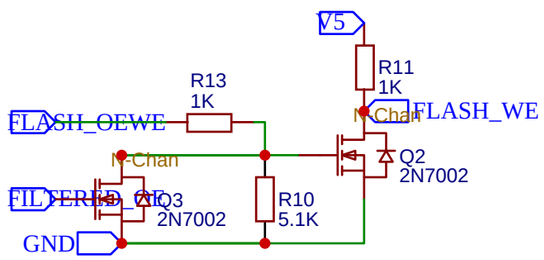

Required for Kicksmash1200 if not present, then must short SOCKET_OE to FILTERED_OE.

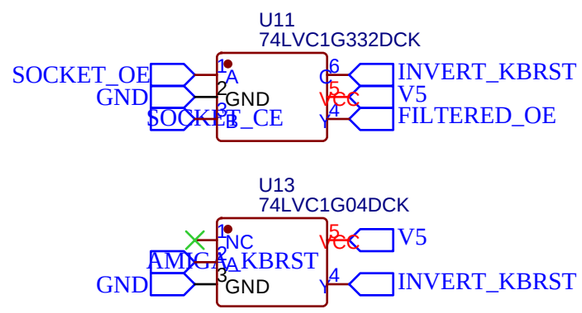

Bypass

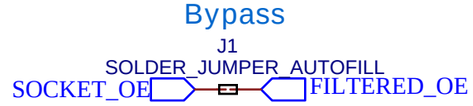

USB Type-C

Cutout version

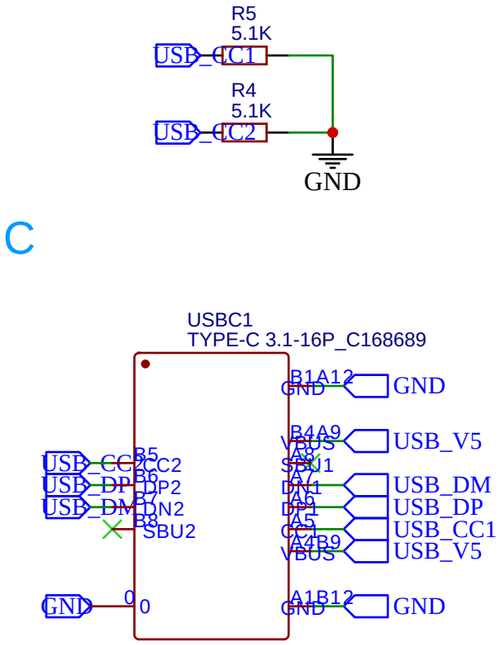

Raised version

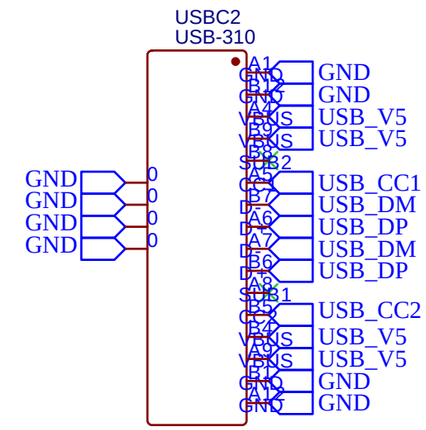

TITLE: Buffer + USB		REV: 10.0
EasyEDA	Company: eebugs.com	Sheet: 3/4
	Date: 2026-06-29 Drawn By: cdhooper	

A3000/A4000/4KT/AA3K 1200/4KCR

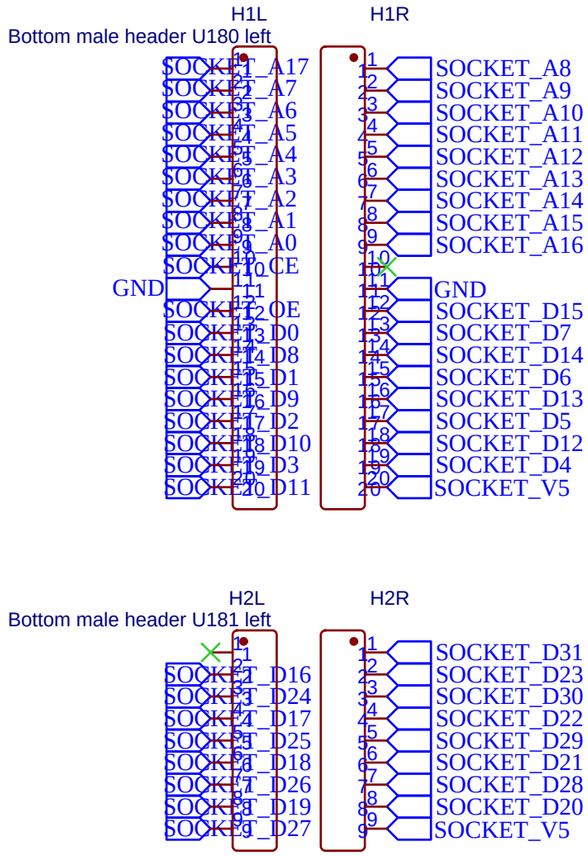

A3000 U182/U183 ROM Tower

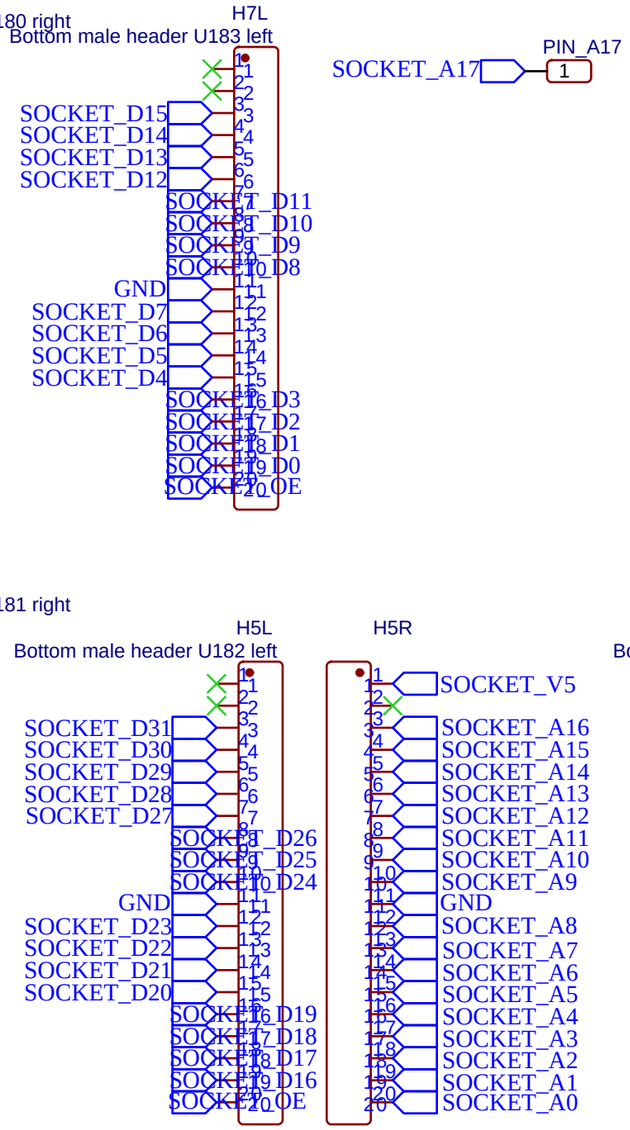

Consolidate with APCI

AmigaPCI AT27C4096

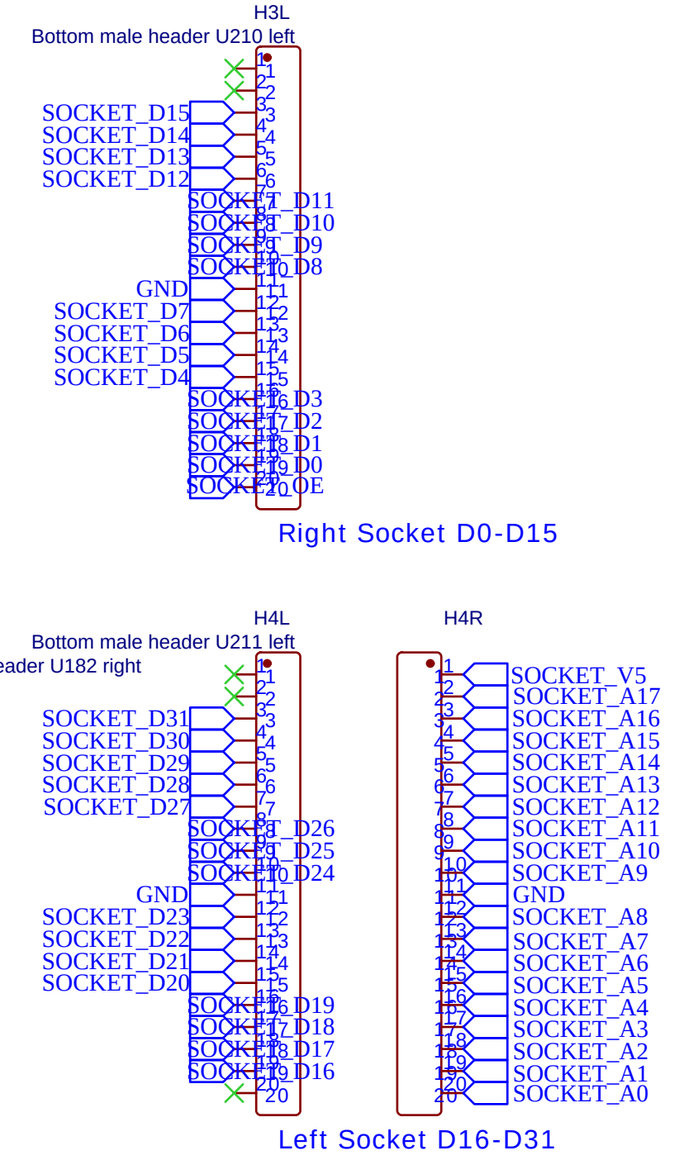

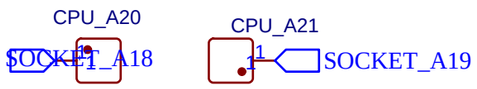

TITLE: Sockets		REV: 10.0
EasyEDA	Company: eebugs.com	Sheet: 4/4
	Date: 2026-06-29 Drawn By: cdhooper	