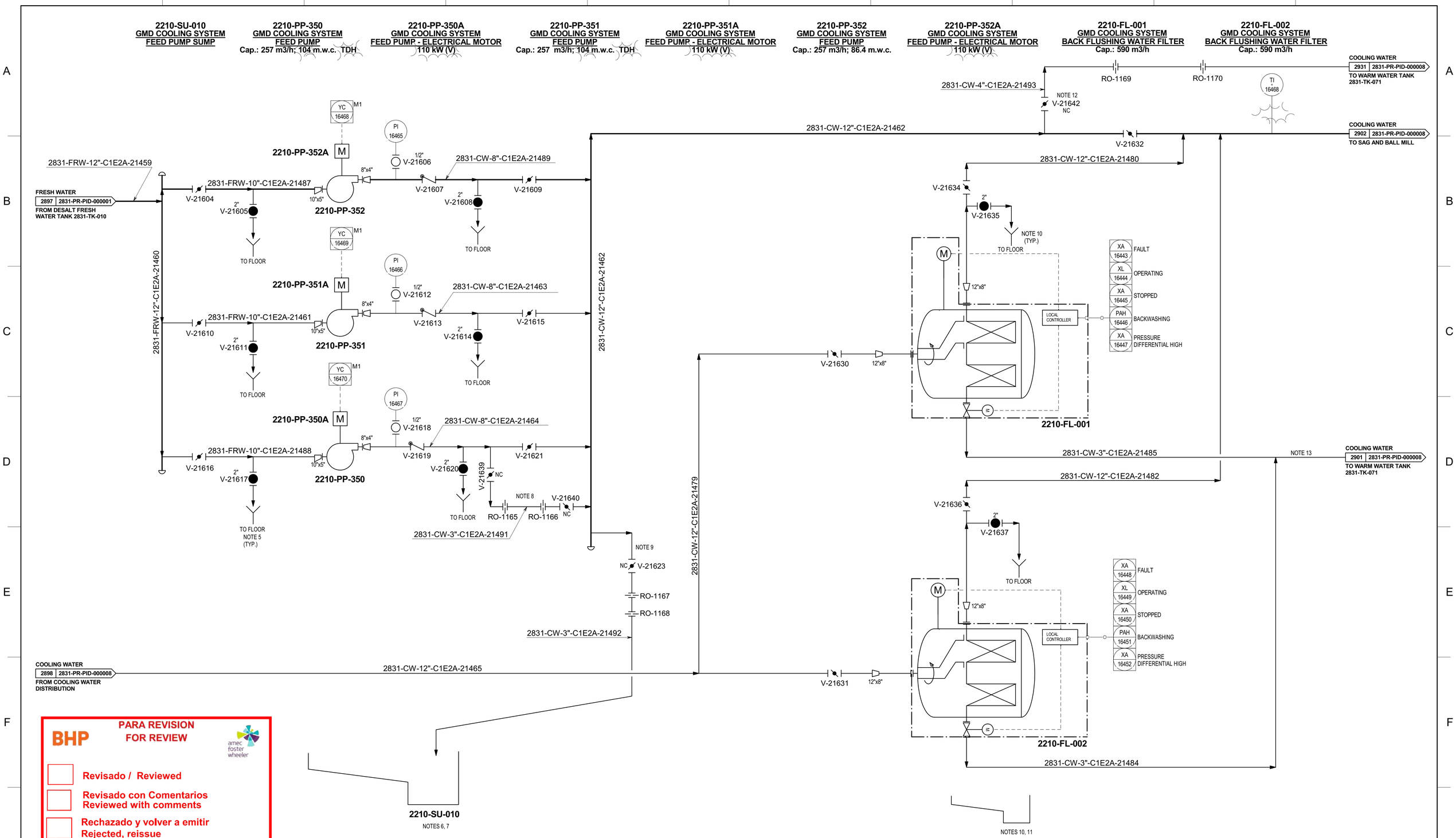

BHP — amec foster wheeler

PARA REVISION FOR REVIEW

- [ ] Revisado / Reviewed
- [ ] Revisado con Comentarios / Reviewed with comments
- [ ] Rechazado y volver a emitir / Rejected, reissue
- [x] Solo Información / Information Only

Fecha / Date	Firma / Signature
17-02-2020	17-02-2020

1.- FOR P&ID LEGENDS AND SYMBOLS SEE DRAWING N° 4-V2-2000-PR-PID-000001@000009.
2.- * INDICATES THAT IS PROVIDED BY VENDOR OR EQUIPMENT SUPPLIER.
3.- IN EQUIPMENT´S POWER DESCRIPTION, (E) ESTIMATED, (C) CALCULATED, (V) VENDOR´S DATA.
4.- FOR FLUID CODES SEE DRAWQING N° 4-V2-2000-PR-PID-000004.
5.- ALL DRAINAGES TO BE CONDUCTED TO THE SUMP 2210-SU-010.
6.- CONTAINMENT AREA FOR GMD COOLING SYSTEM FEED PUMPS.
7.- THE DRAINAGES WILL BE COLLECTED BY PORTABLE MOTOR PUMP SUPPLIED BY THE COMPANY AND DISCHARGE INTO A TANKER TRUCK.
8.- MANUAL LINE FILLING.
9.- MANUAL LINE EMPTYING.
10.- DRAINAGE OF THE FILTERS WILL BE COLLECTED INTO A CONTAINMENT AREA.
11.- THE DRAINAGE WILL BE RECOVERED BY A PORTABLE MOTOR PUMP SUPPLIED BY THE COMPANY AND DISCHARGE INTO THE ADJACENT SUMP 2831-SU-256.
12.- VALVE V-21642 MUST BE OPEN WHEN IS OPERATING THE SAG MILL AND ONLY ONE BALL MILL IN ORDER TO AVOID EXCESS OF WATER TO THE MILLS COOLING SYSTEM.
13.- ALWAYS WEAR EAR PROTECTION NEXT TO THE FILTER. HIGH SOUND PRESSURE LEVEL CAN OCCUR AT FLUSHING.

Rev. No.	DATE	REVISION	DIS.	REV.	D.L	BHP	REFERENCE DOCUMENTS	N° BHP
1	13-02-20	ISSUED APPROVED FOR CONSTRUCTION	FC	HA	JB			
0	15-10-19	ISSUED APPROVED FOR CONSTRUCTION	FC	CA	JB			
0A	13-09-19	ISSUED FOR COMPANY APPROVAL	FC	CA	JB			
A	12-09-19	ISSUED FOR INTERNAL REVIEW	FC	CA	JB		CONC. FACILITIES GMD COOLING SYSTEM	4-V2-2800-PR-PFD-000004

NOTES

Fluor-Salfa

ENGINEERING	SCALE	DATE	SCALE	DATE
DESIGNED BY:			DRAWN BY: F. CORNEJO	19-07-19
REVISED BY: C. ARIAS	19-07-19		DISCIPLINE LEADER: J. BARRERA	19-07-19
ENGINEERING MGR: C. LEGGETT	19-07-19		PROJECT MGR:	
BHP ENGINEERING MGR:			PROJECT MGR:	

VENDOR DRAWING N°: 4-V2-2831-PR-PID-000028

BHP MINERA SPENCE S.A.

SGO PROJECT

UTILITIES & ONSITE INFRASTRUCTURE
GMD COOLING SYSTEM
FEED WATER PUMPS - P&ID

CONTRACT N°: 8500135645

BHP DRAWING N°: 4-V2-2831-PR-PID-000028

REV. 1