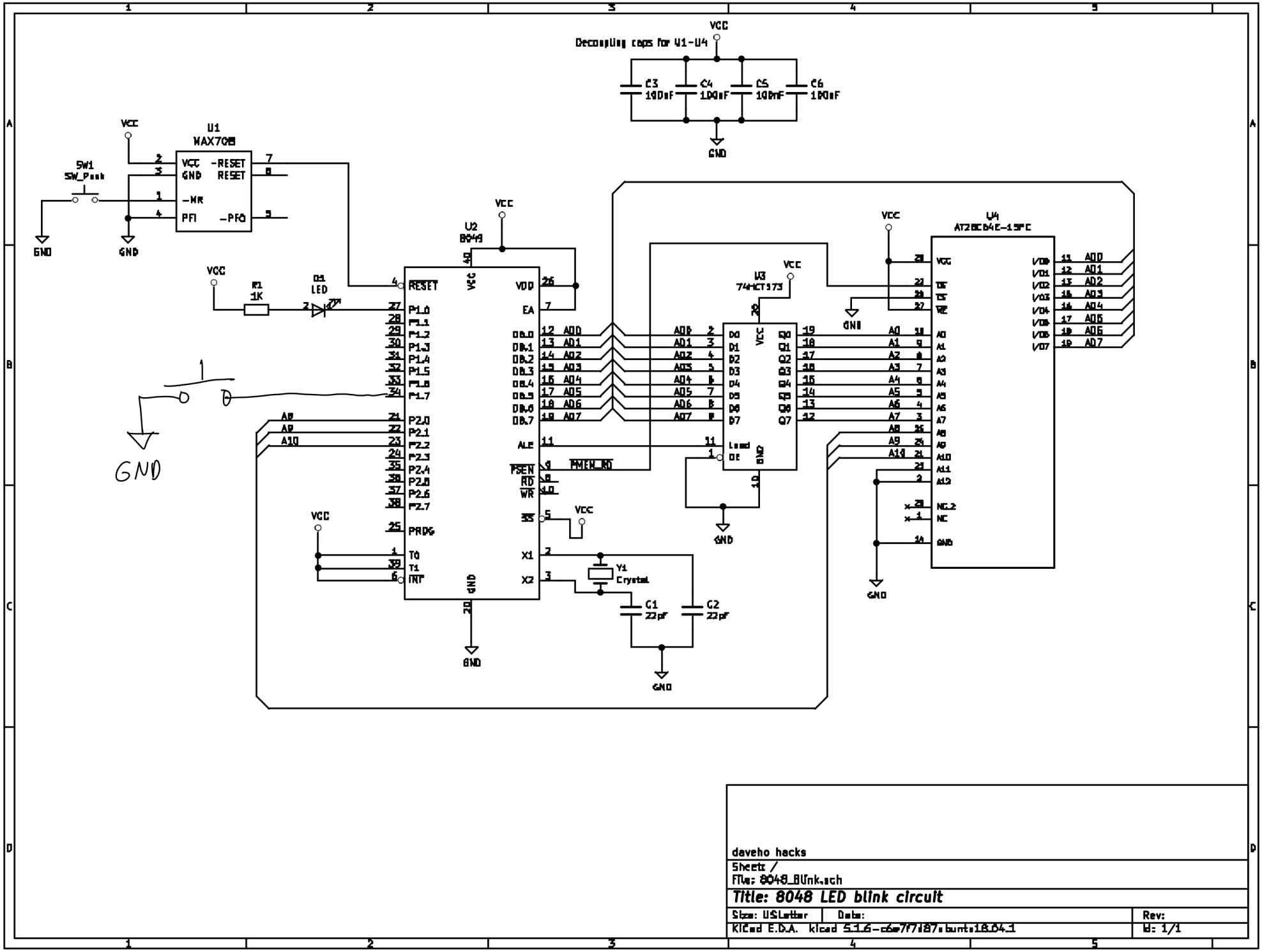

daveho hacks	
Sheet: /	
File: 8048_Blink.sch	
Title: 8048 LED blink circuit	
Size: USLetter Date:	Rev:
KiCad E.D.A. kicad 5.1.6-c6e7f7d87~ubuntu18.04.1	Id: 1/1