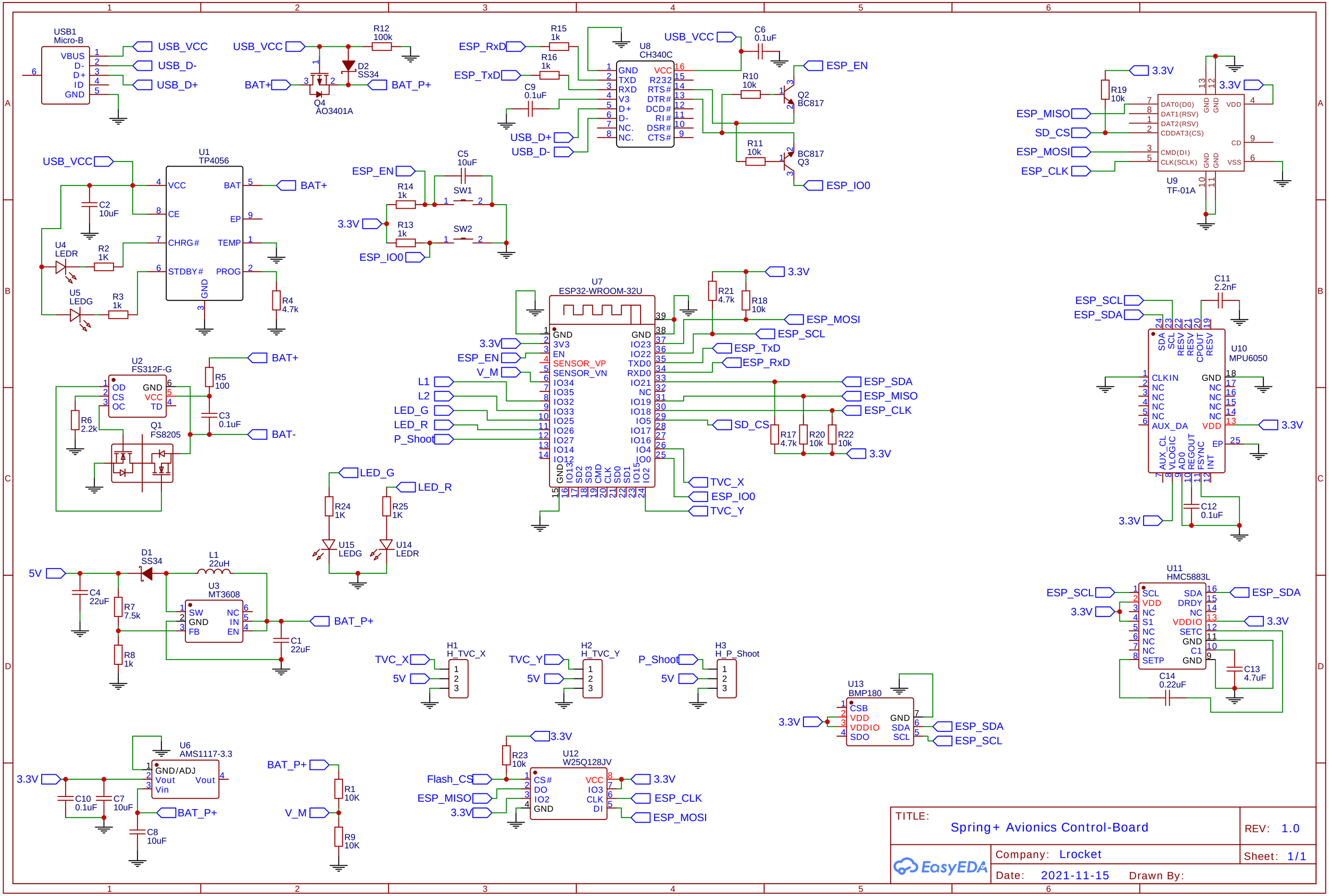

TITLE: Spring+ Avionics Control-Board

REV: 1.0

Company: Lrocket

Sheet: 1/1

Date: 2021-11-15

Drawn By: