Modify note

Version	Date	Author	Change Note	Approved
V00	20180428	WXZ	First edictor	
V01	20181122			

RK3399 I2C MAP

Port	Pin name	Domain	Bus name	Pull-up voltage	Slave Device	Slave Addr (MS 7Bits)	Note	Slave Bus Capability
I2C0	GPIO1_B7/SPI3_RXD/I2C0_SDA GPIO1_C0/SPI3_TXD/I2C0_SCL	PMUIO2 VCC3V0_IO	I2C0_SDA_PMIC I2C0_SCL_PMIC	VCC3V0	TT8563	0xA2,0XA3	RTC	
					Rockchip RK808	0x1b	PMIC	
I2C1	GPIO4_A1/I2C1_SDA GPIO4_A2/I2C1_SCL	APIO5 VCC1V8_IO	I2C1_SDA_PCIE I2C1_SDA_PCIE	VCCA1V8_CODEC				
			I2C1_SDA_AUDIO I2C1_SCL_AUDIO	VCCA1V8_CODEC	ALC5640	0x38h	Audio codec	
			I2C1_SDA_CAM I2C1_SCL_CAM	VCCA1V8_CODEC	Omnivision OV13850	0x6c0,0x6D	MIPI Camera	
				VCCA1V8_CODEC	S5K4ECGX	0x78	DVP Camera	
			Other pin function	VCCA1V8_CODEC				
I2C2	GPIO2_A0/VOP_D0/CIF_D0/I2C2_SDA GPIO2_A1/VOP_D1/CIF_D1/I2C2_SCL	APIO2 VCC1V8_IO	Other pin function	VCC1V8_DVP				
I2C3	GPIO4_C0/I2C3_SDA/UART2B_RX GPIO4_C1/I2C3_SCL/UART2B_TX	APIO4 VCC3V0_IO	I2C3_SDA_HDMI I2C3_SCL_HDMI	VCC_3V0				
I2C4	GPIO1_B3/I2C4_SDA GPIO1_B4/I2C4_SCL	PMUIO2 VCC3V0_IO	I2C4_SDA_TYPEC I2C4_SCL_TYPEC	VCC_3V0	Fairchild FUSB302B	0x44,0x46	USB-TypeC Mux	100kHz,400KHz,1MHz fast mode+
			I2C4_SDA_TP I2C4_SCL_TP	VCC_3V0	Silead GSL3680	0x40	Touch panel	
			AT18_SDA AT18_SCL	VCC_3V0	AT18		Encryption	
			Other pin function	VCC_3V0				
I2C5	GPIO3_B2/MAC_RXER/I2C5_SDA GPIO3_B3/MAC_CLK/I2C5_SCL	APIO1 VCC3V3_LAN	Other pin function	VCC3V3_S3				
I2C6	GPIO2_B1/SPI2_RXD/CIF_HREF/I2C6_SDA GPIO2_B2/SPI2_TXD/CIF_CLKIN/I2C6_SCL	APIO2 VCC1V8_IO	Other pin function	VCC1V8_DVP				
I2C7	GPIO2_A7/VOP_D7/CIF_D7/I2C7_SDA GPIO2_B0/VOP_CLK/CIF_VSYNC/I2C7_SCL	APIO2 VCC1V8_IO	Other pin function					
I2C8	GPIO1_C4/I2C8_SDA GPIO1_C5/I2C8_SCL	PMUIO2 VCC3V0_IO	Other pin function					

www.t-firefly.com

Title: I2C Map		
File: AIO-3399EC		REV: V0.1
Create Date: Monday, March 28, 2016		Page Num: 2
Modify Date: Wednesday, July 24, 2019		Page Total: 34

RK3399 Power Domain Map

Part Port	Domain	Pin name in datasheet	I/O type	Power supply	Power source
Part C	PMUIO1	pmuio1_gpio0ab	1.8V only	VCC1V8_PMUPLL	RK808 VLDO3
Part E	PMUIO2	pmu1830_gpio1abcd	1.8V(Default) 3.0V	VCC_1V5 VCC_3V0	RK808 VLDO6 RK808 VLDO8
Part I	APIO1	gmac_gpio3abc	3.3V only	VCC3V3_S3	RK808 VSW1
Part L	APIO2	bt656_gpio2ab	1.8V(Default) 3.0V	VCC1V8_DVP	RK808 VLDO1
Part G	APIO3	wifi/bt_gpio2cd	1.8V only	VCC1V8_S3	RK808 Buck4
Part K	APIO4	gpio1830_gpio4cd	1.8V 3.0V(Default)	VCC_1V5 VCC3V0_IO	RK808 VLDO6 RK808 VLDO8
Part J	APIO5	audio_gpio3d_gpio4a	1.8V(Default) 3.0V	VCCA1V8_CODEC	RK808 VLDO7
Part F	SDMMC0	sdmmc_gpio4b	1.8V 3.0V(Default)	VCC_SDIO	RK808 VLDO4

Firefly www.t-firefly.com

Title: Power Domain Map

File: AIO-3399EC | REV: V0.1

Create Date: Monday, March 28, 2016 | Page Num: 3

Modify Date: Wednesday, July 24, 2019 | Page Total: 34

RK3399 Power Tree

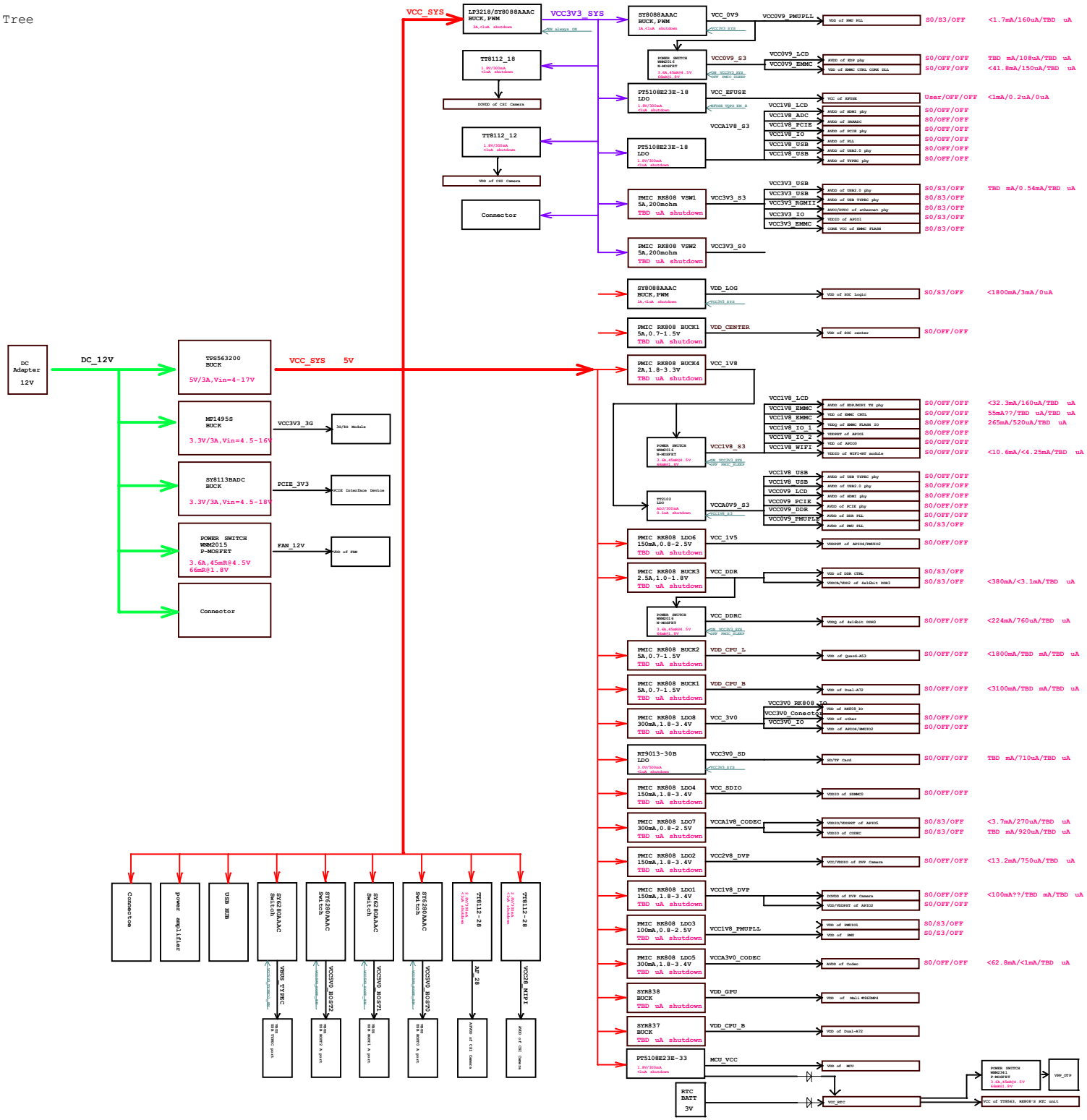

www.t-firefly.com

Title:	Power Tree
File:	AIO-3399EC
REV:	V0.1
Create Date:	Monday, March 28, 2016
Page Num:	4
Modify Date:	Wednesday, July 24, 2019
Page Total:	34

Block Diagram

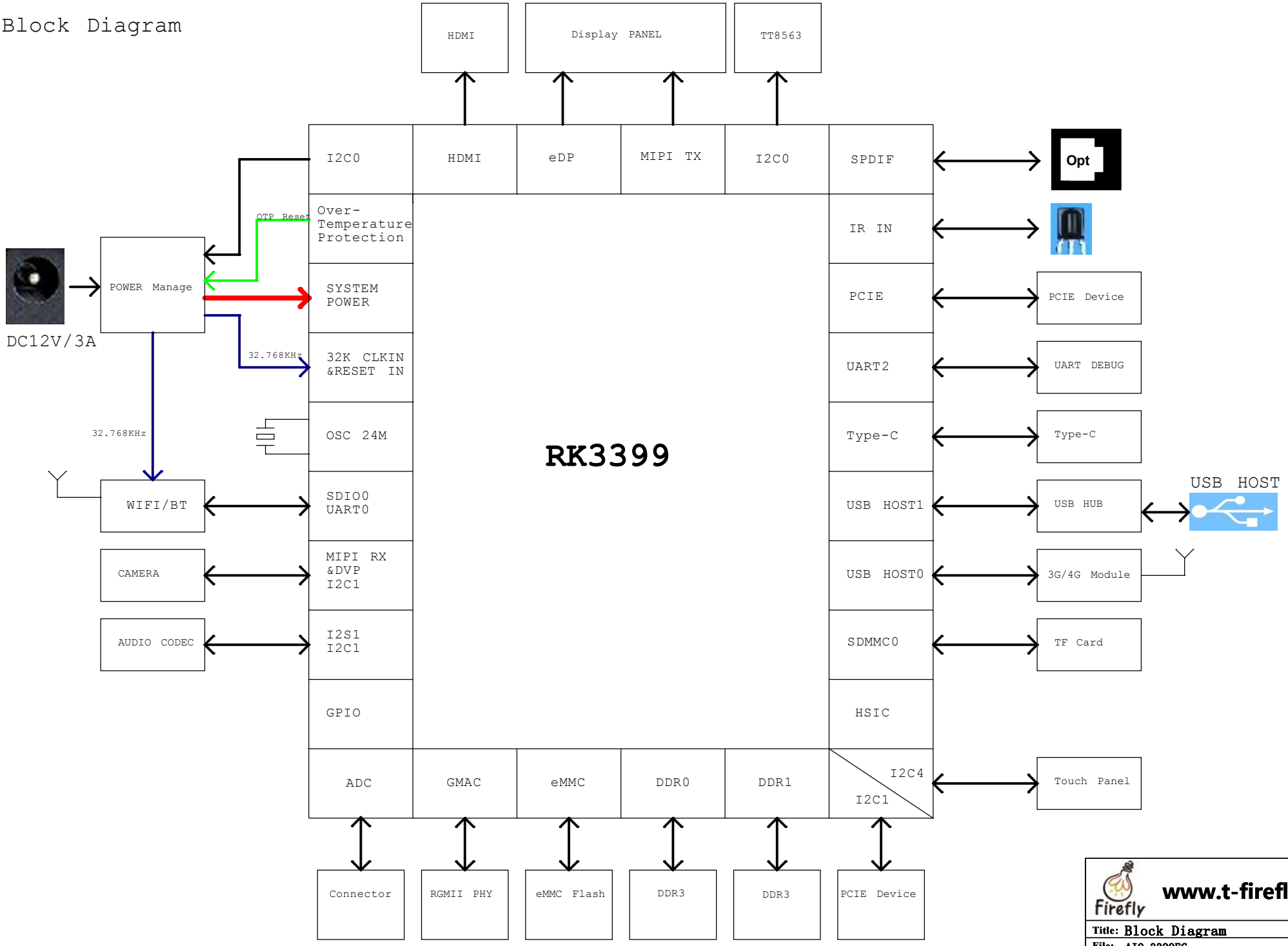

Firefly www.t-firefly.com

Title: Block Diagram		
File: AIO-3399EC		REV: V0.1
Create Date: Friday, June 17, 2016	Page Num: 5	
Modify Date: Wednesday, July 24, 2019	Page Total: 34	

RK3399 Power

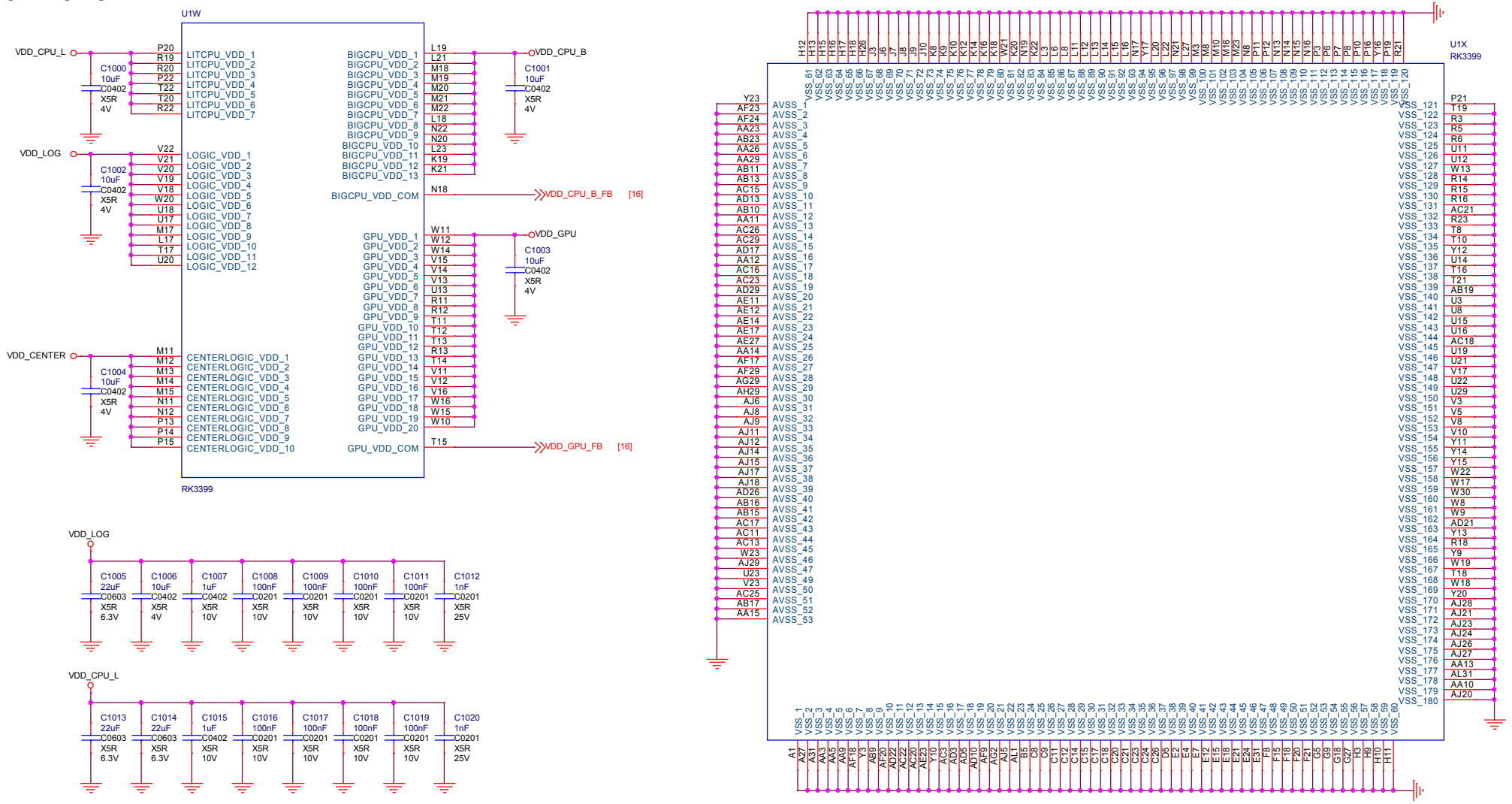

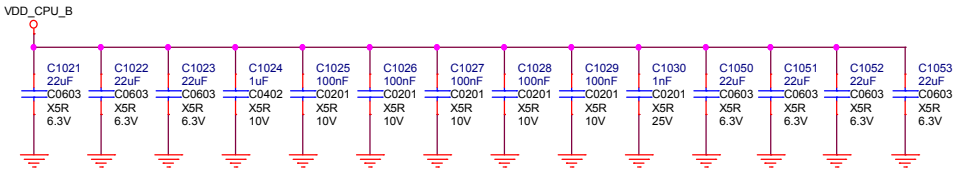

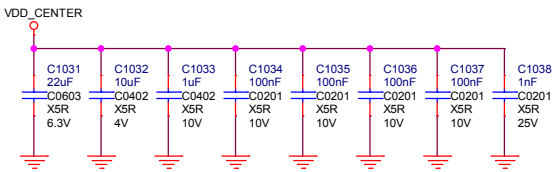

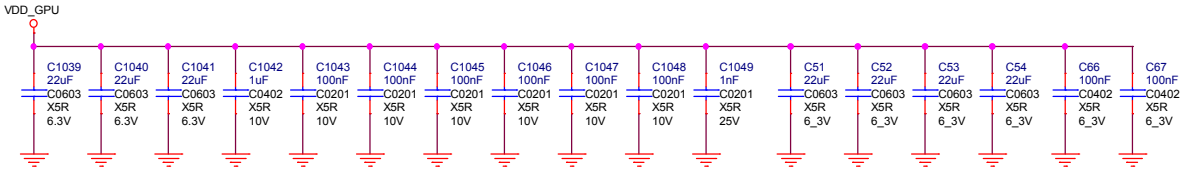

www.t-firefly.com

Title: RK3399 Power		
File: AIO-3399EC		REV: V0.1
Create Date: Monday, March 28, 2016	Page Num: 6	
Modify Date: Wednesday, July 24, 2019	Page Total: 34	

RK3399 PMU Controler

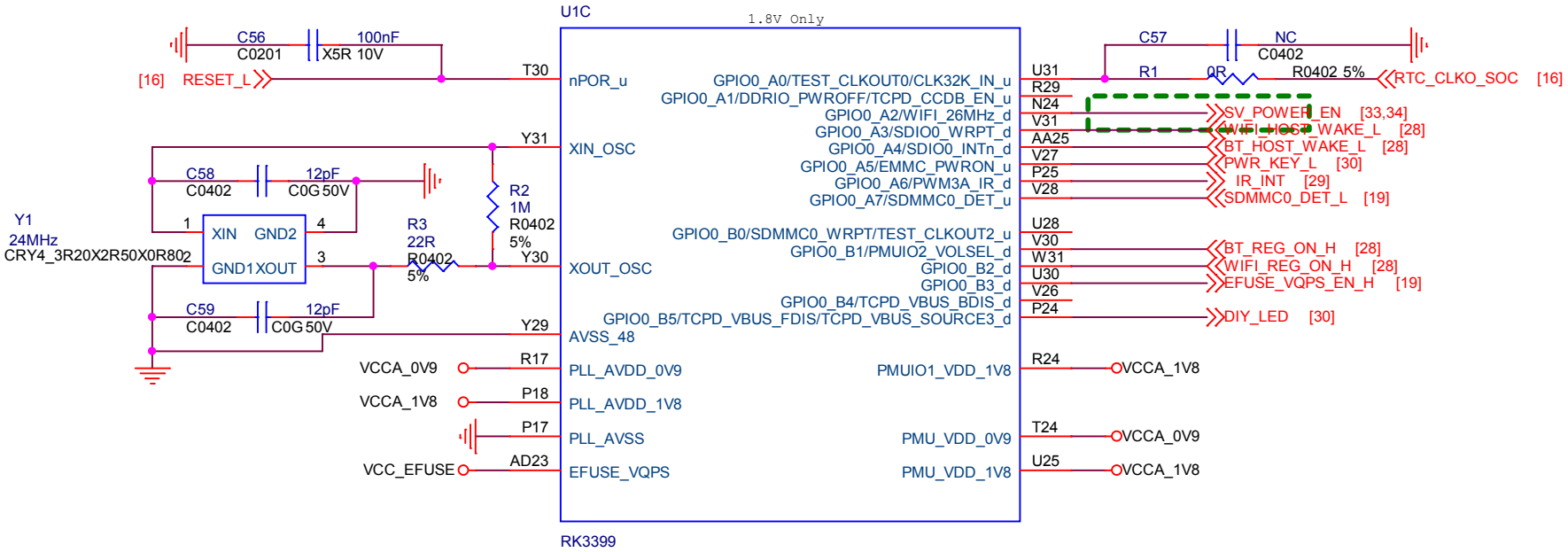

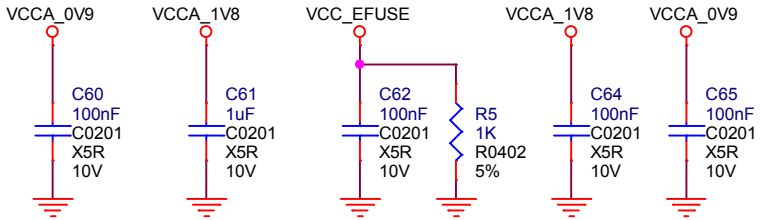

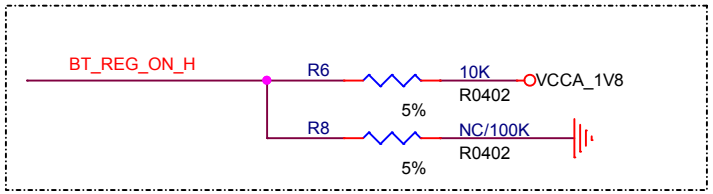

Note:
GPIO0_B1/PMUIO2_VOLSEL defined as a set pin for PMUIO2 part voltage domain after power-on reset.It is pull-down for 1.8V or pull-up for 3.0V,and later changed to output mode by software

www.t-firefly.com

Title: RK3399 PMU Controler		
File: AIO-3399EC		REV: V0.1
Create Date: Monday, March 28, 2016	Page Num: 7	
Modify Date: Wednesday, July 24, 2019	Page Total: 34	

RK3399 DDR Controler

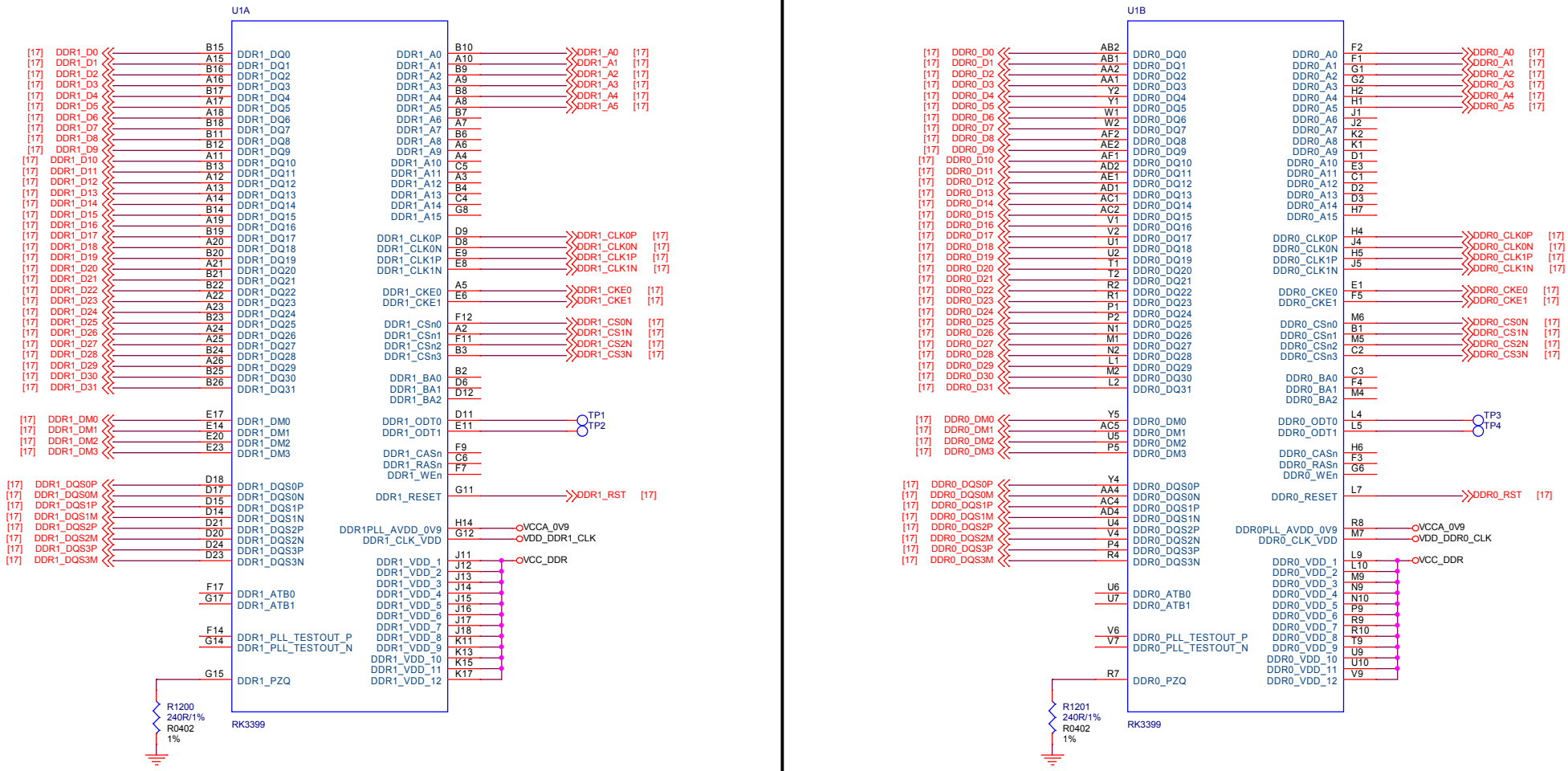

DDR FILTER

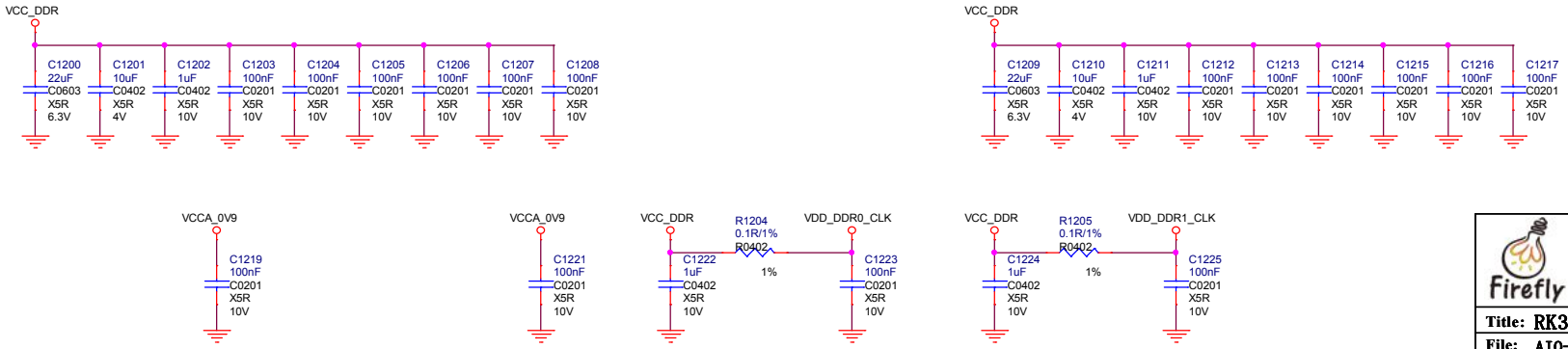

www.t-firefly.com

Title: RK3399 DDR Controler		
File: AIO-3399EC		REV: V0.1
Create Date: Monday, March 28, 2016	Page	Num: 8
Modify Date: Wednesday, July 24, 2019	Page	Total: 34

eMMC

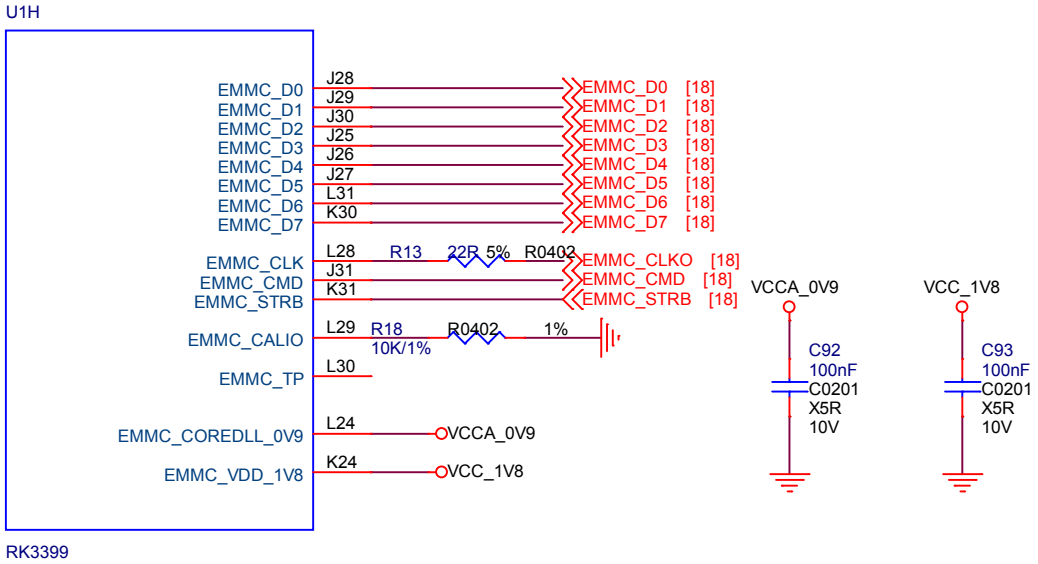

SDIO0

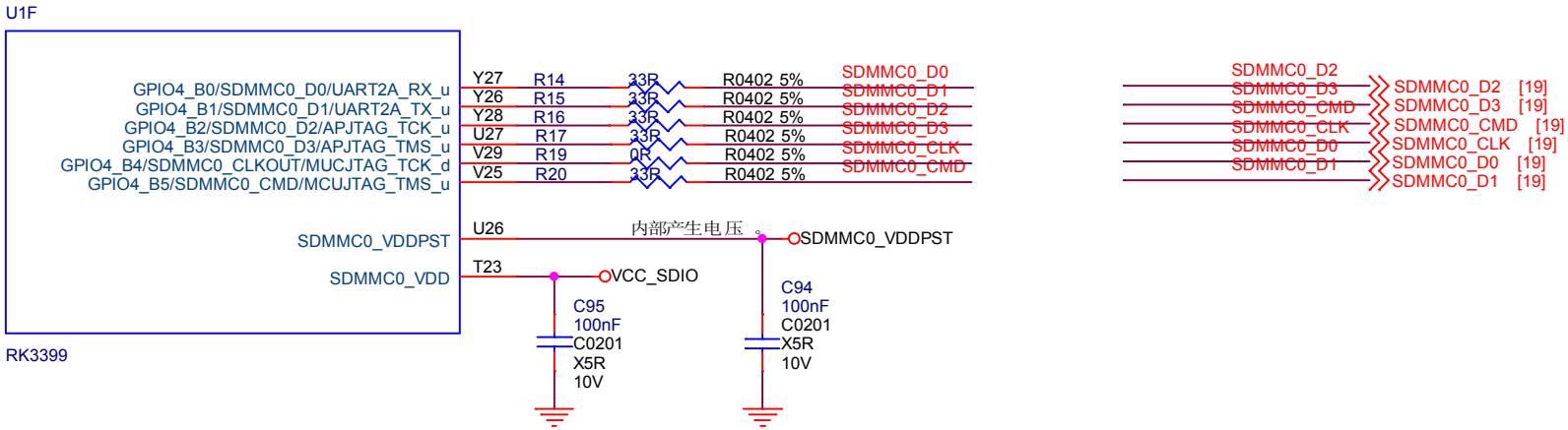

Firefly

www.t-firefly.com

Title: RK3399 Flash/SDMMC Controler		
File: AIO-3399EC		REV: V0.1
Create Date: Monday, March 28, 2016		Page Num: 9
Modify Date: Wednesday, July 24, 2019		Page Total: 34

RK3399 USIC Controler

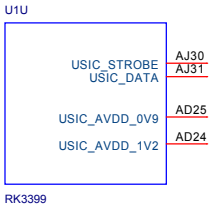

RK3399 USB Controler

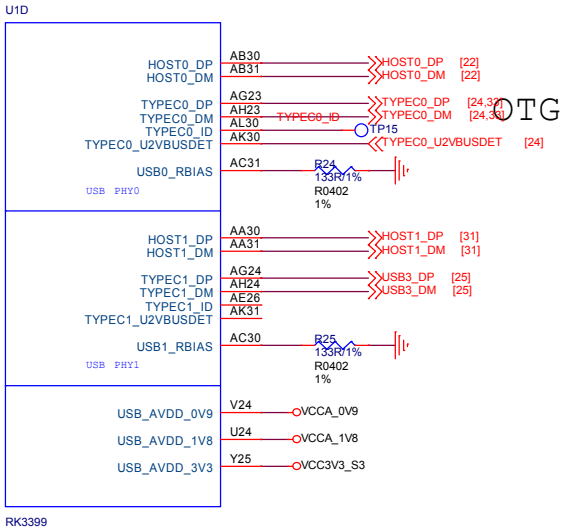

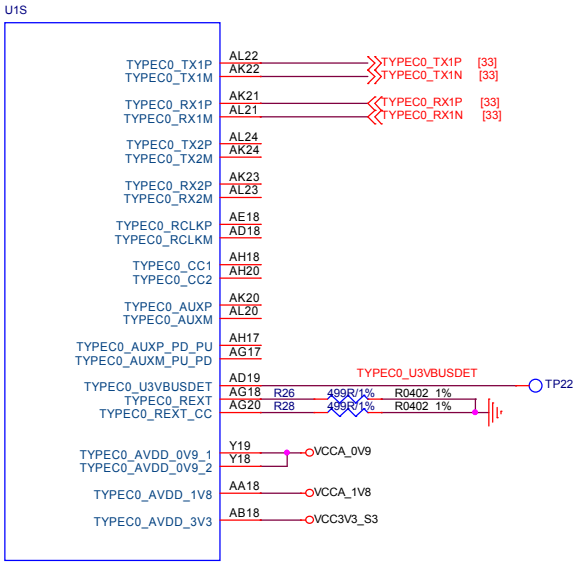

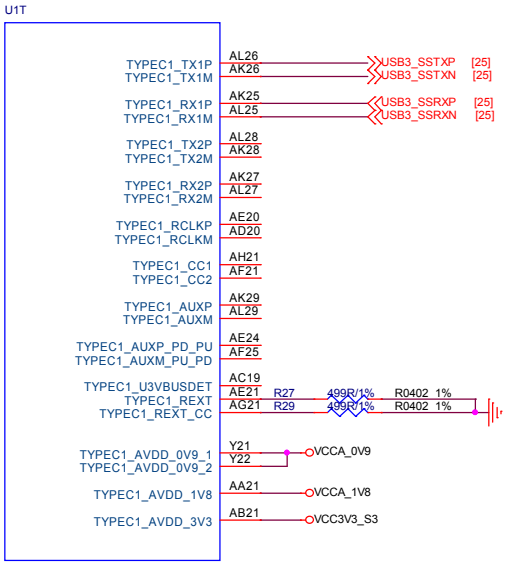

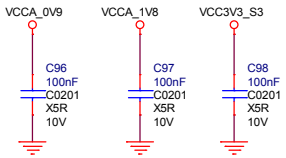

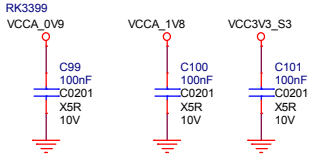

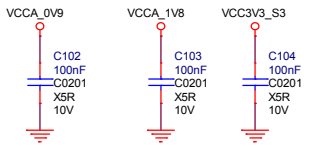

www.t-firefly.com

Title: RK3399 USB/USIC Controler		
File: AIO-3399EC		REV: V0.1
Create Date: Monday, March 28, 2016	Page Num: 10	
Modify Date: Wednesday, July 24, 2019	Page Total: 34	

RK3399 SARADC

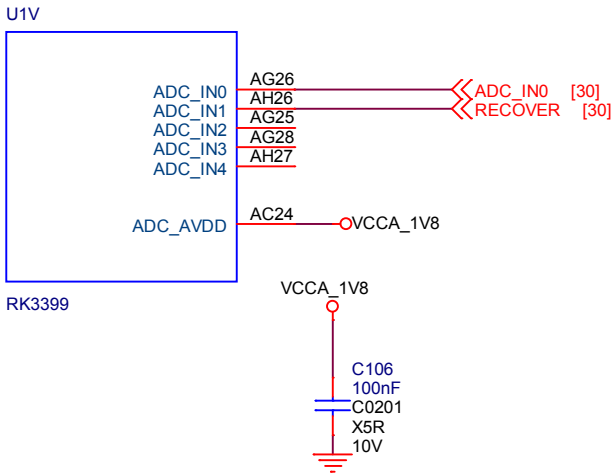

RK3399 PCIE

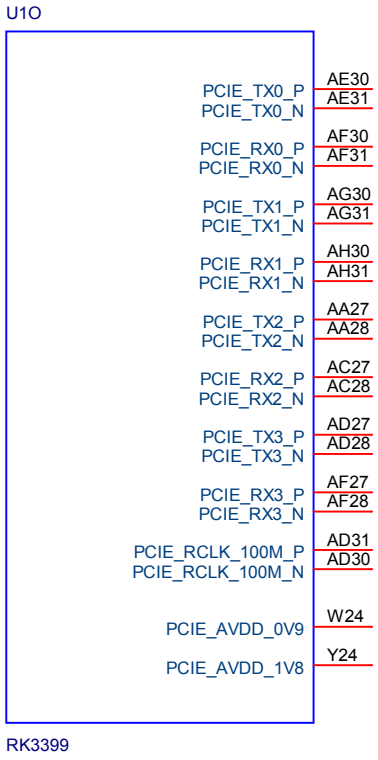

www.t-firefly.com

Title: RK3399 SARADC/PCIE		
File: AIO-3399EC		REV: V0.1
Create Date: Monday, March 28, 2016	Page Num: 11	
Modify Date: Wednesday, July 24, 2019	Page Total: 34	

RK3399 DVP

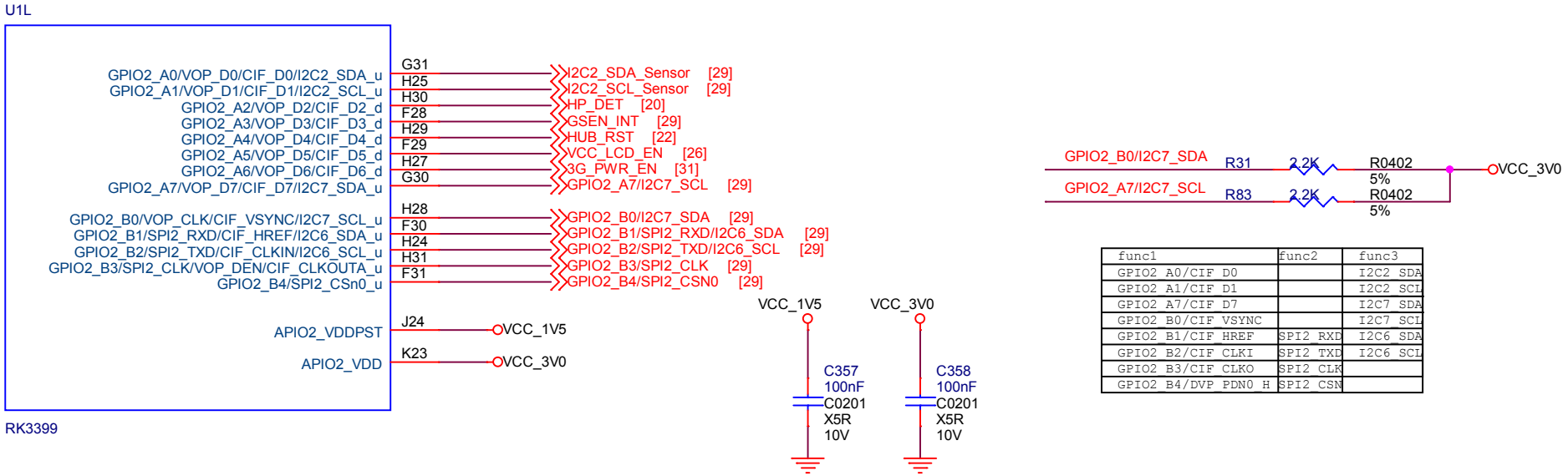

func1	func2	func3
GPIO2_A0/CIF_D0		I2C2_SDA
GPIO2_A1/CIF_D1		I2C2_SCL
GPIO2_A7/CIF_D7		I2C7_SDA
GPIO2_B0/CIF_VSYNC		I2C7_SCL
GPIO2_B1/CIF_HREF	SPI2_RXD	I2C6_SDA
GPIO2_B2/CIF_CLKI	SPI2_TXD	I2C6_SCL
GPIO2_B3/CIF_CLKO	SPI2_CLK	
GPIO2_B4/DVP_PDN0_H	SPI2_CSN	

RK3399 CSI

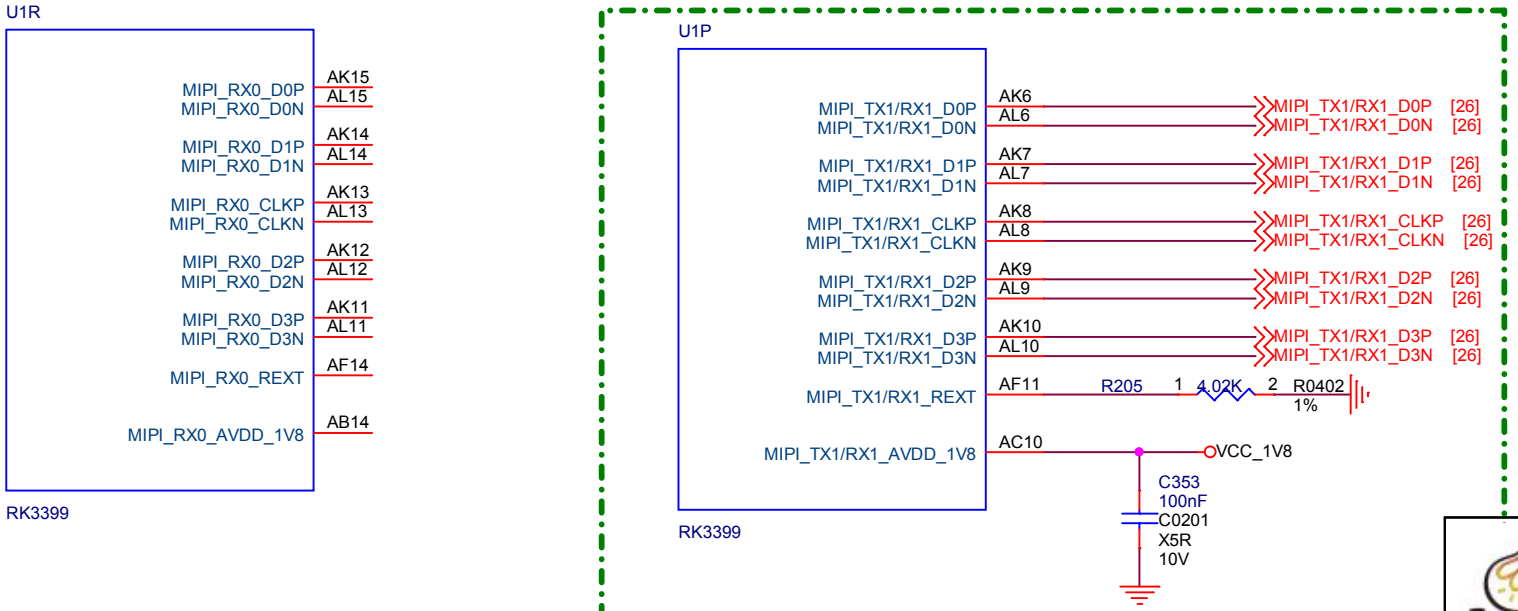

www.t-firefly.com

Title: RK3399 Camera Interface		
File: AIO-3399EC		REV: V0.1
Create Date: Monday, March 28, 2016		Page Num: 12
Modify Date: Wednesday, July 24, 2019		Page Total: 34

HDMI Interface

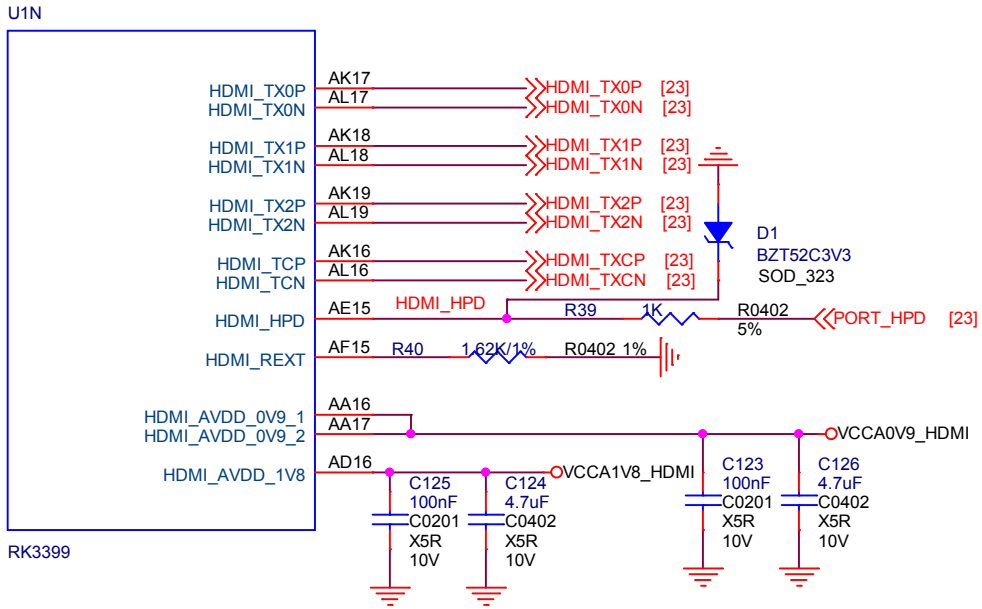

eDP Interface

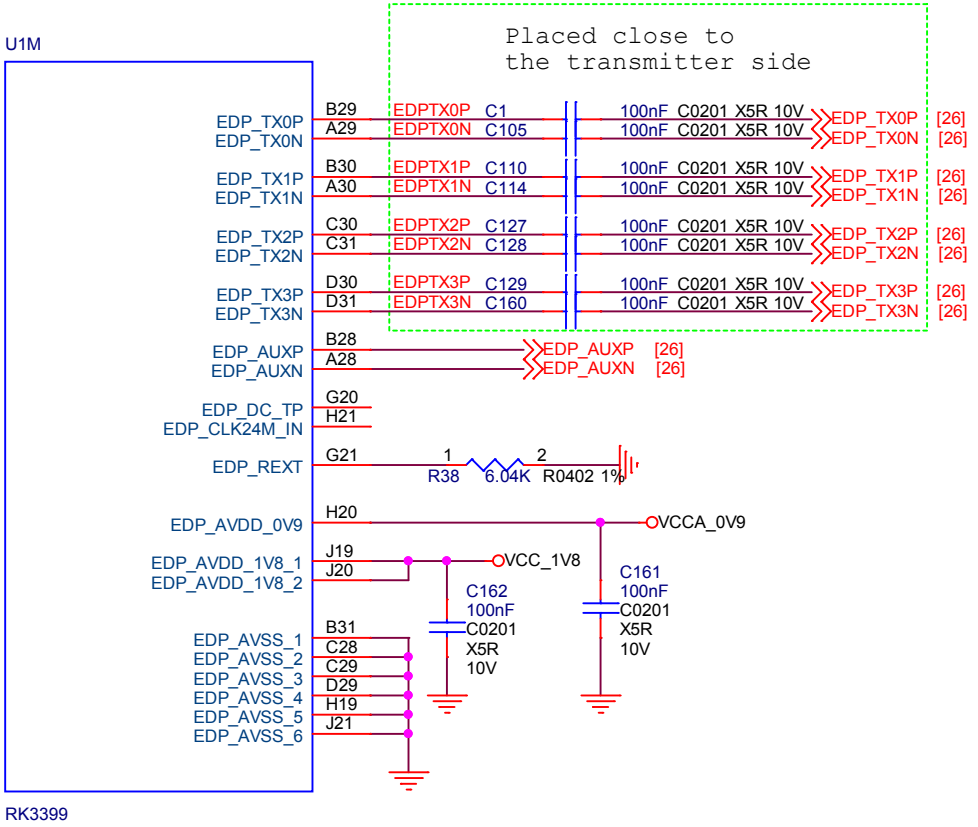

MIPI Interface

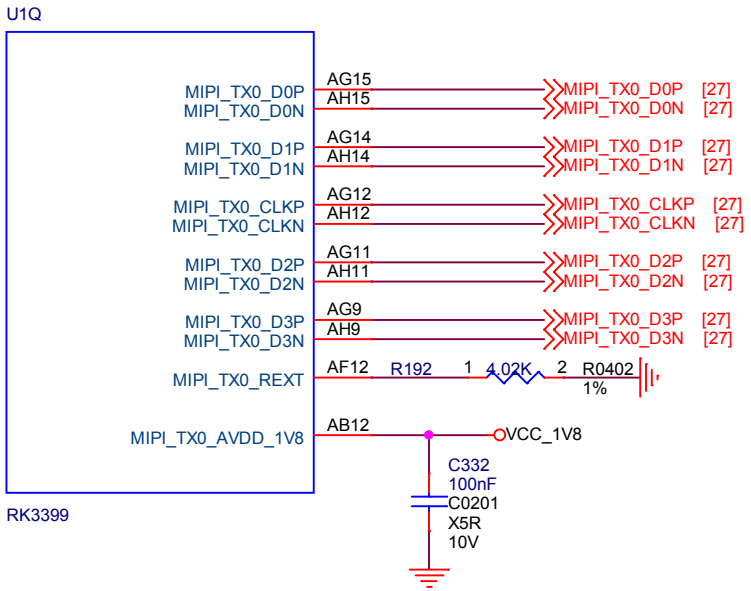

Firefly

www.t-firefly.com

Title:	RK3399 Display Interface	
File:	AIO-3399EC	REV: V0.1
Create Date:	Monday, March 28, 2016	Page Num: 13
Modify Date:	Wednesday, July 24, 2019	Page Total: 34

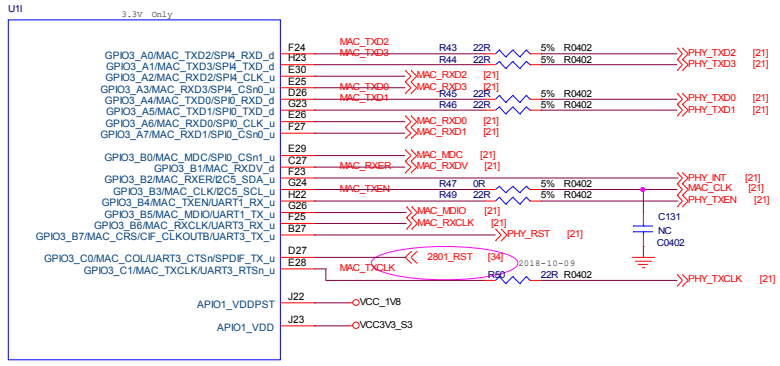

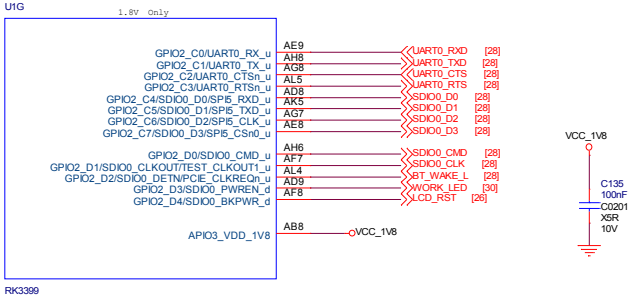

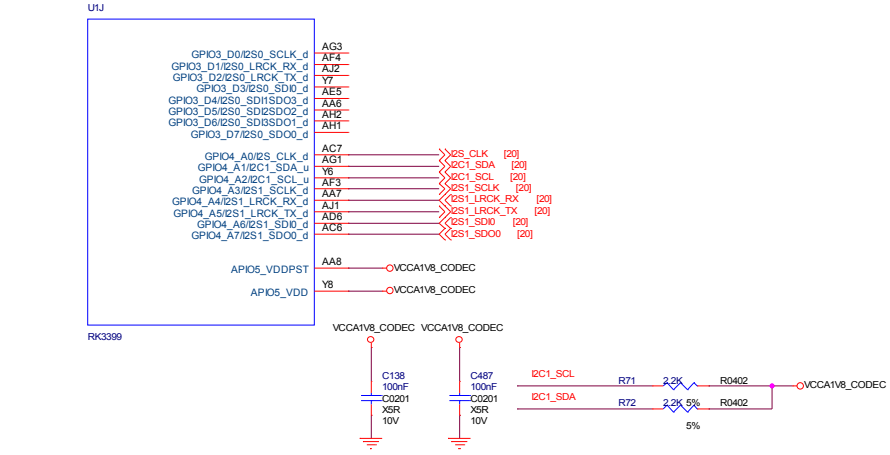

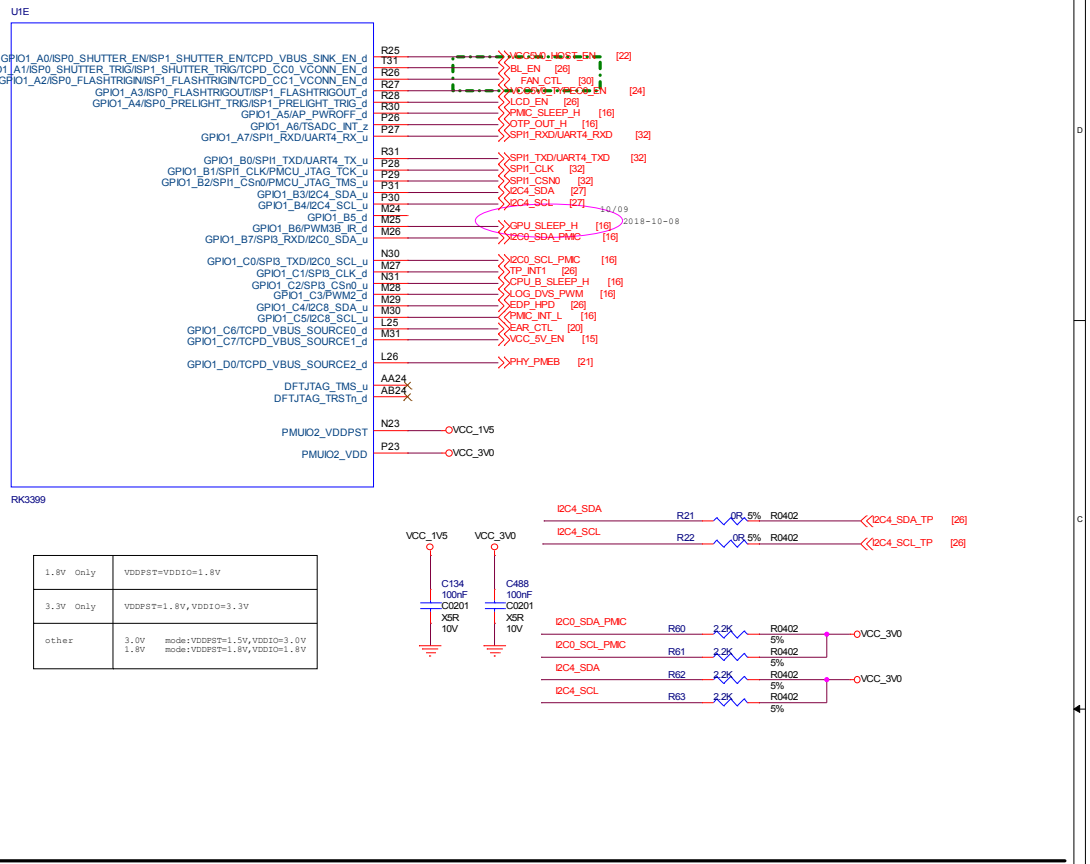

1.8V Only	VDDPST=VDDIO=1.8V
3.3V Only	VDDPST=1.8V,VDDIO=3.3V
other	3.0V mode:VDDPST=1.5V,VDDIO=3.0V 1.8V mode:VDDPST=1.8V,VDDIO=1.8V

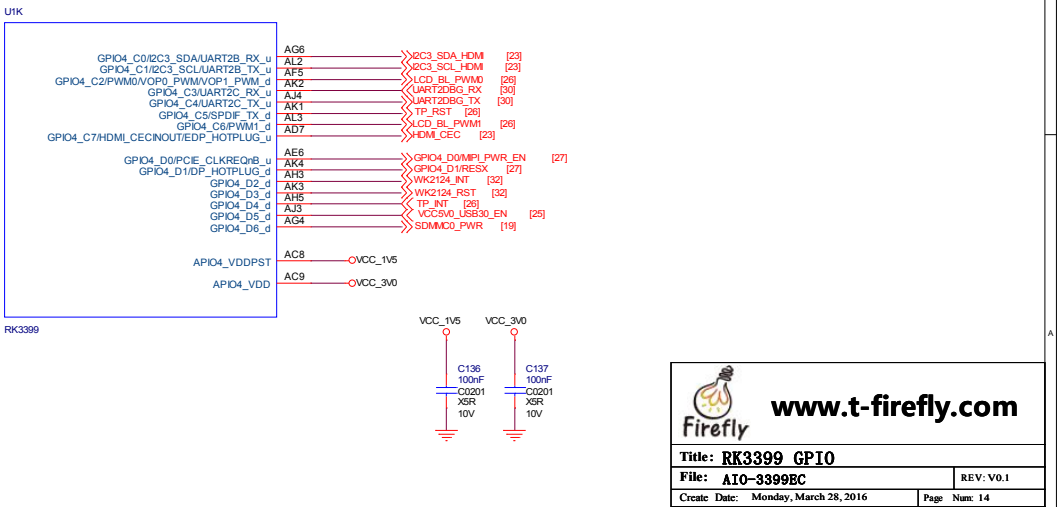

Firefly www.t-firefly.com

Title: RK3399 GPIO		
File: AIO-3399EC		REV: V0.1
Create Date: Monday, March 28, 2016	Page Num: 14	
Modify Date: Wednesday, July 24, 2019	Page Total: 34	

DC_IN

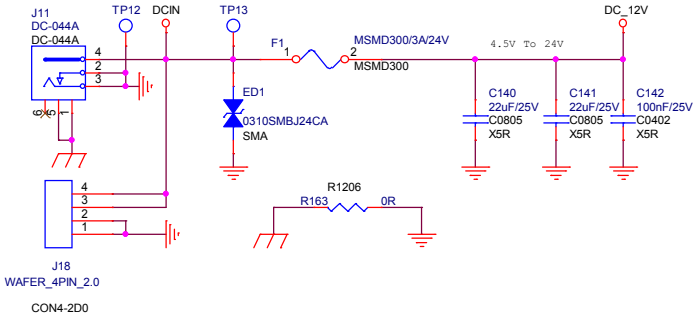

VCC_SYS

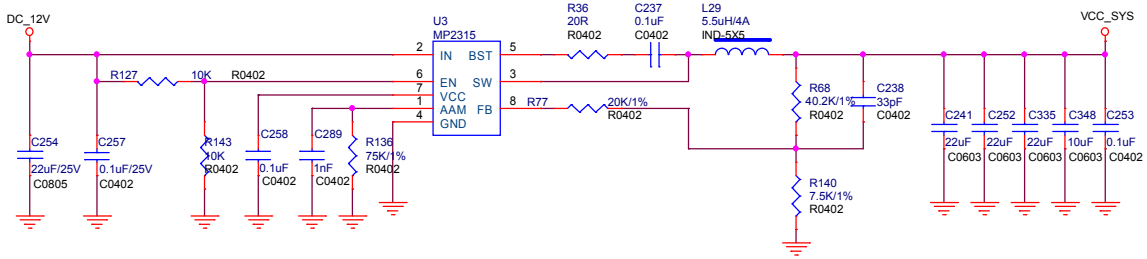

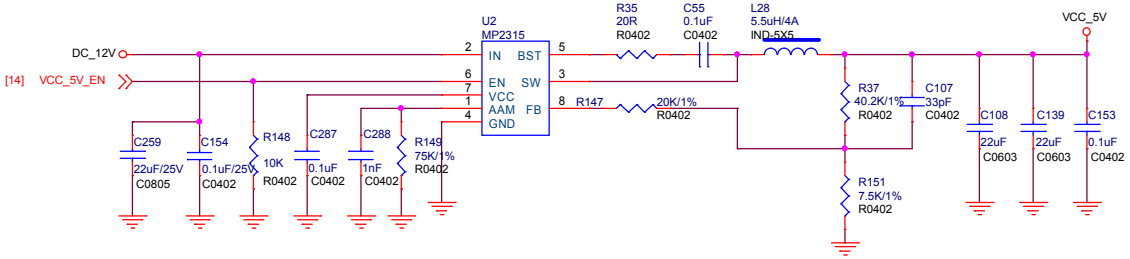

VCC3V3_SYS

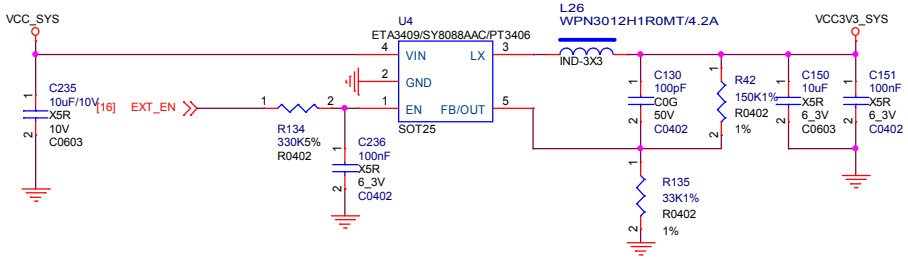

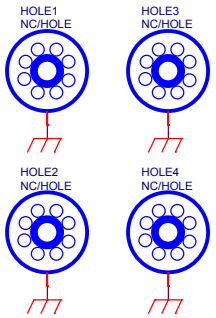

Firefly www.t-firefly.com

Title: POWER_IN		
File: AIO-3399EC		REV: V0.1
Create Date: Friday, April 20, 2018	Page Num: 15	
Modify Date: Wednesday, July 24, 2019	Page Total: 34	

RK808

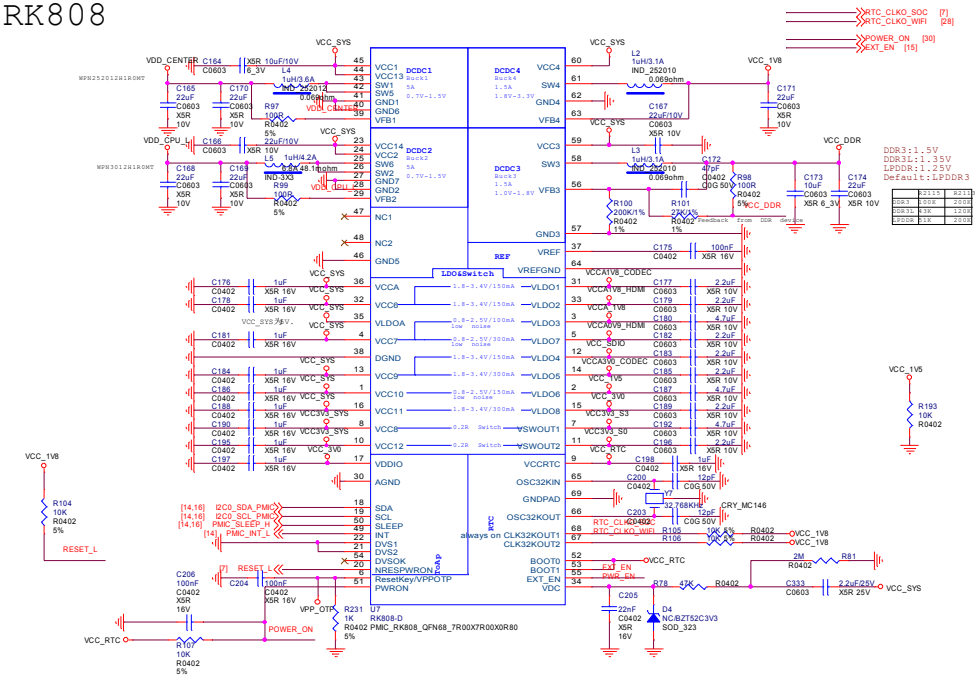

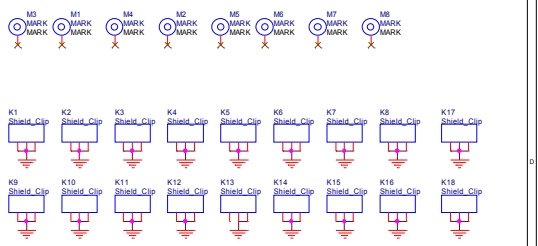

VDD_GPU

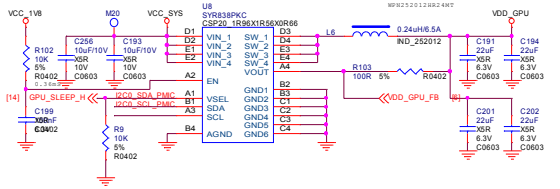

VDD_LOG

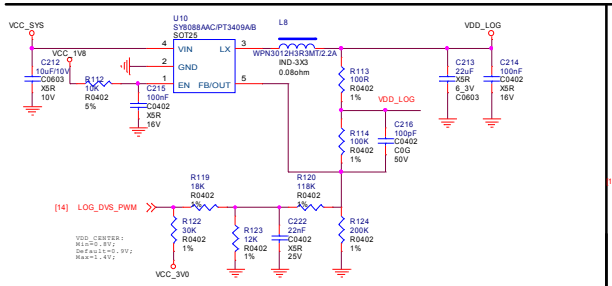

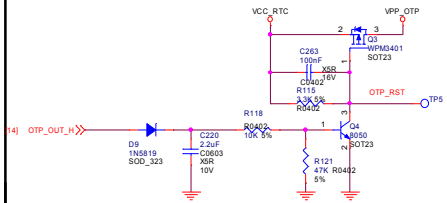

Over-temperature Protection

VDD_CPU_B

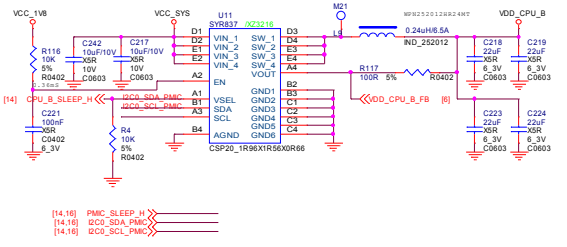

VCCA_0V9

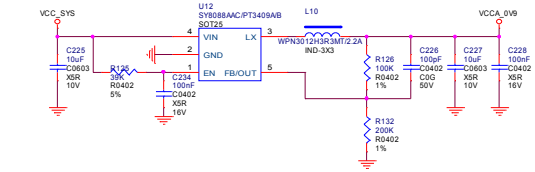

RTC_BAT

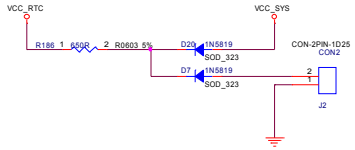

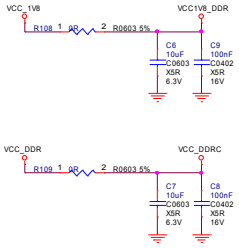

www.t-firefly.com

Title:	Power Manager RK808
File:	A10-3399BC
REV:	V1.0
Create Date:	Monday, March 28, 2016
Page Num:	16
Modify Date:	Wednesday, July 24, 2019
Page Total:	34

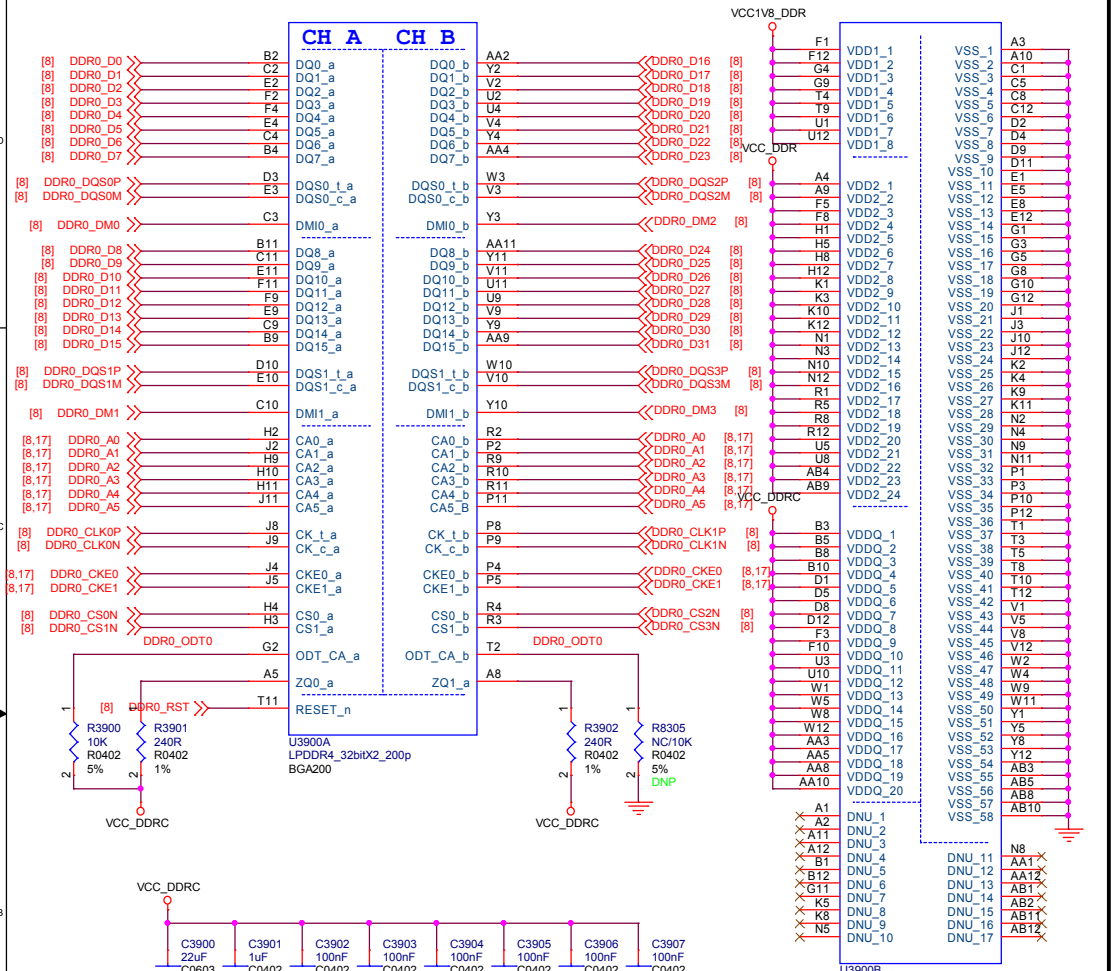

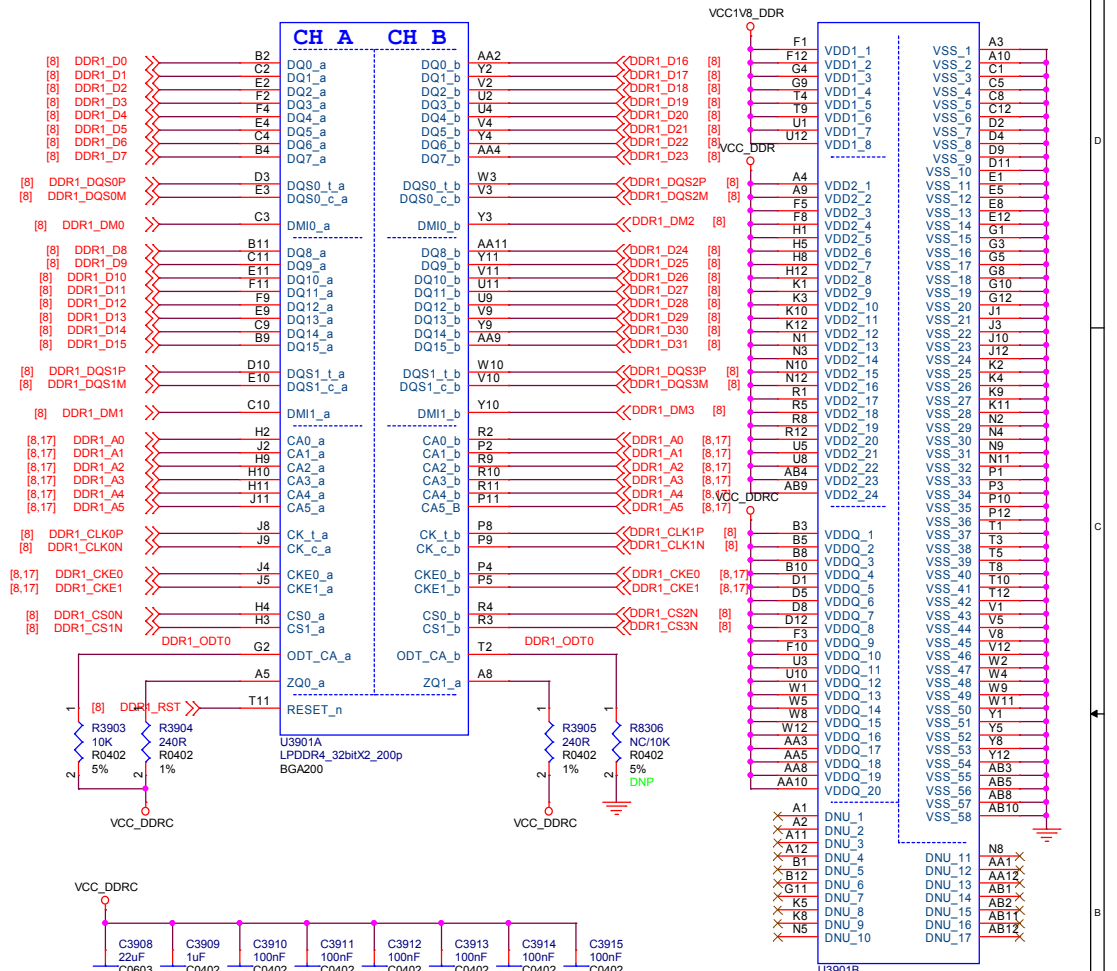

Firefly www.t-firefly.com

Title:	RAM-LPDDR4(200P)	
File:	AIO-3399EC	REV: V0.1
Create Date:	Monday, May 28, 2018	Page Num: 17
Modify Date:	Wednesday, July 24, 2019	Page Total: 34

eMMC FLASH

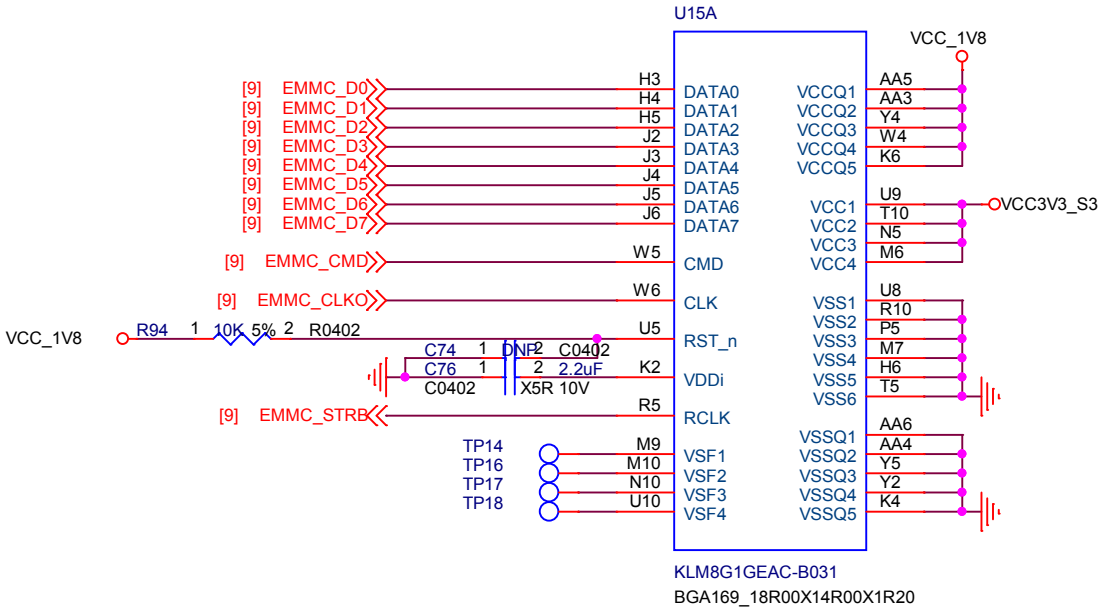

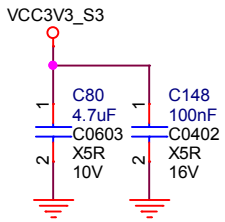

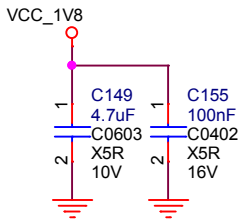

Note:
Reserve PAD for Update.

www.t-firefly.com

Title: Memory-eMMC		
File: AIO-3399EC		REV: V0.1
Create Date: Saturday, June 02, 2018	Page Num: 18	
Modify Date: Wednesday, July 24, 2019	Page Total: 34	

TF CARD

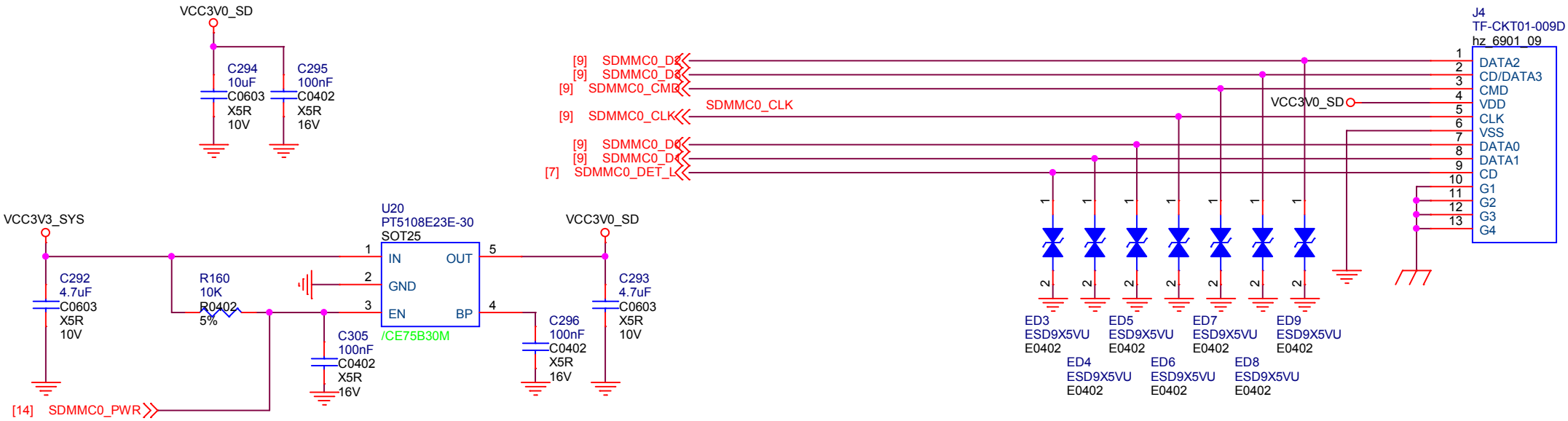

EFUSE

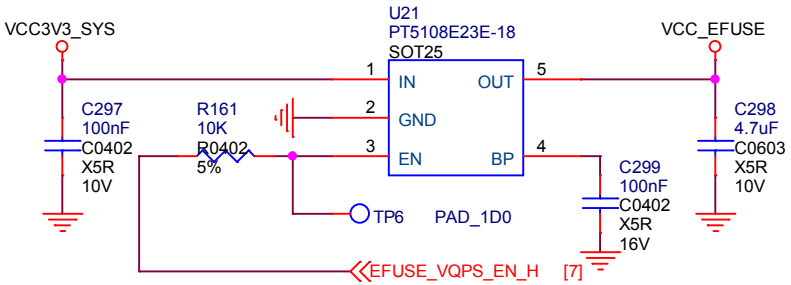

Radiator

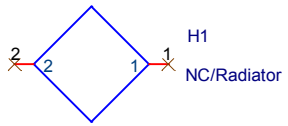

www.t-firefly.com

Title: TF Card/EFUSE		
File: AIO-3399EC		REV: V0.1
Create Date: Wednesday, March 30, 2016	Page Num: 19	
Modify Date: Wednesday, July 24, 2019	Page Total: 34	

CODEC

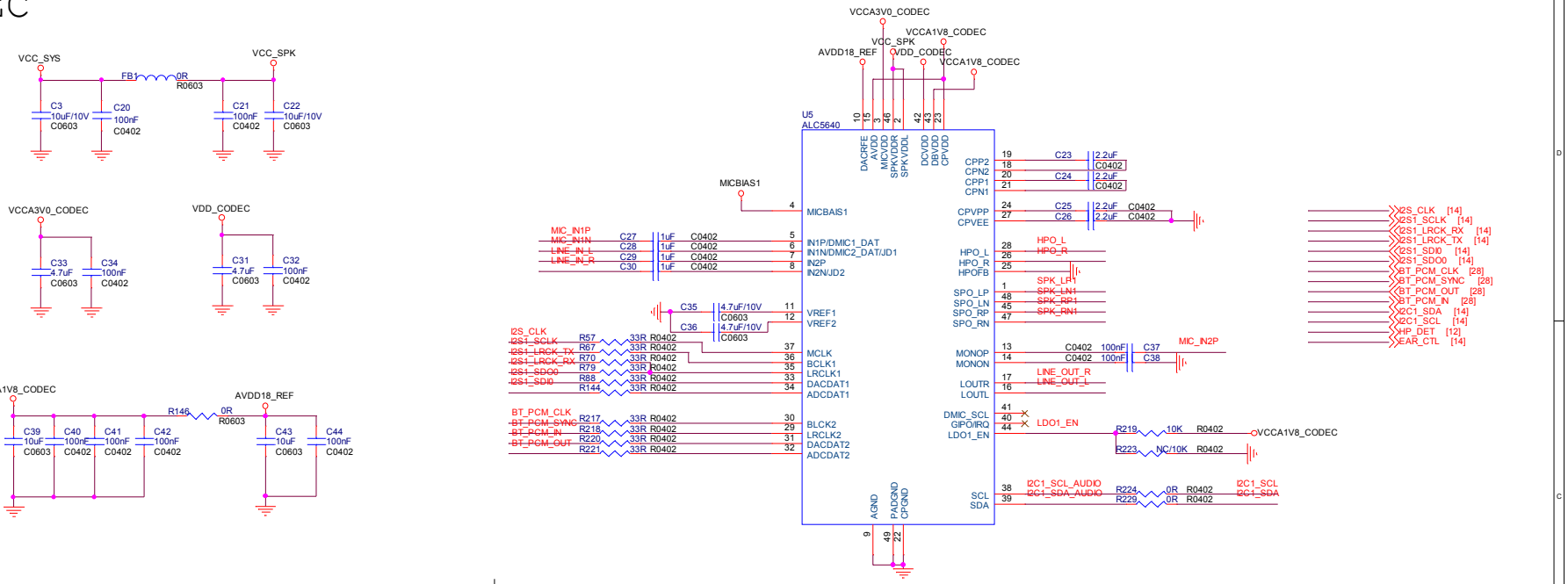

MIC0

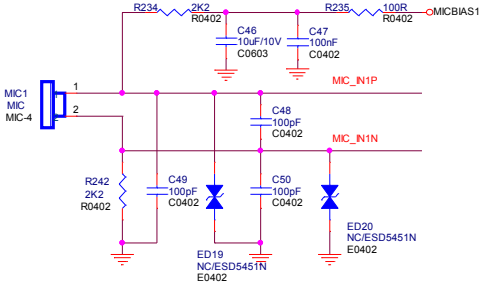

EARPHONE

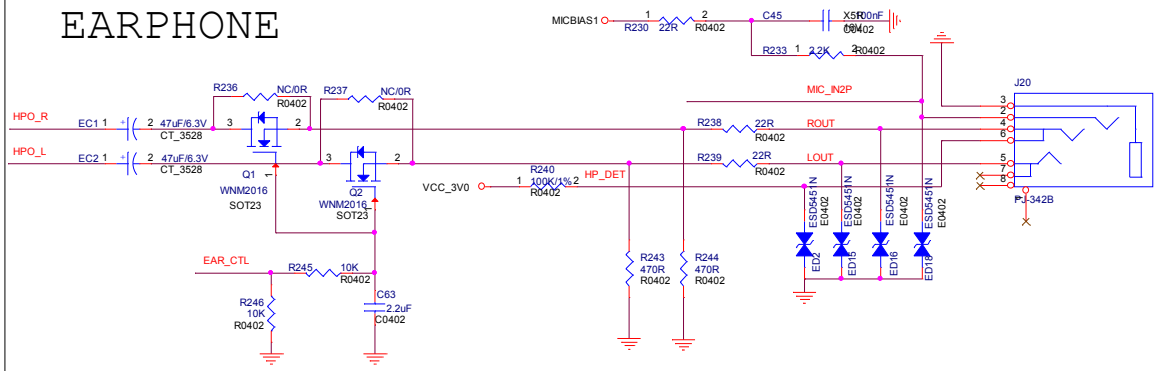

SPEAKER

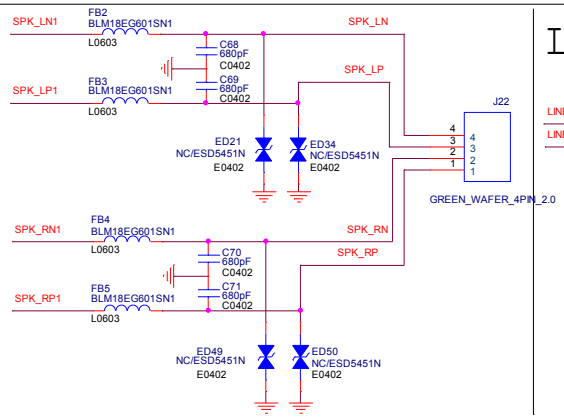

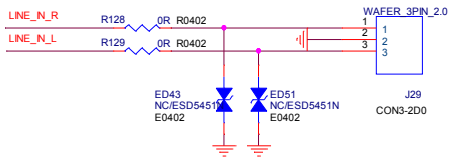

LINE_OUT

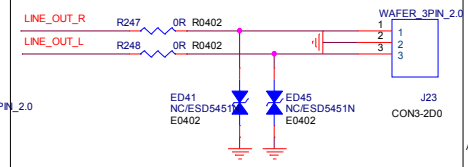

Firefly www.t-firefly.com

Title: Audio Codec-ALC5640		
File: AIO-3399EC		REV: V0.1
Create Date: Monday, May 28, 2018	Page	Num: 20
Modify Date: Wednesday, July 24, 2019	Page	Total: 34

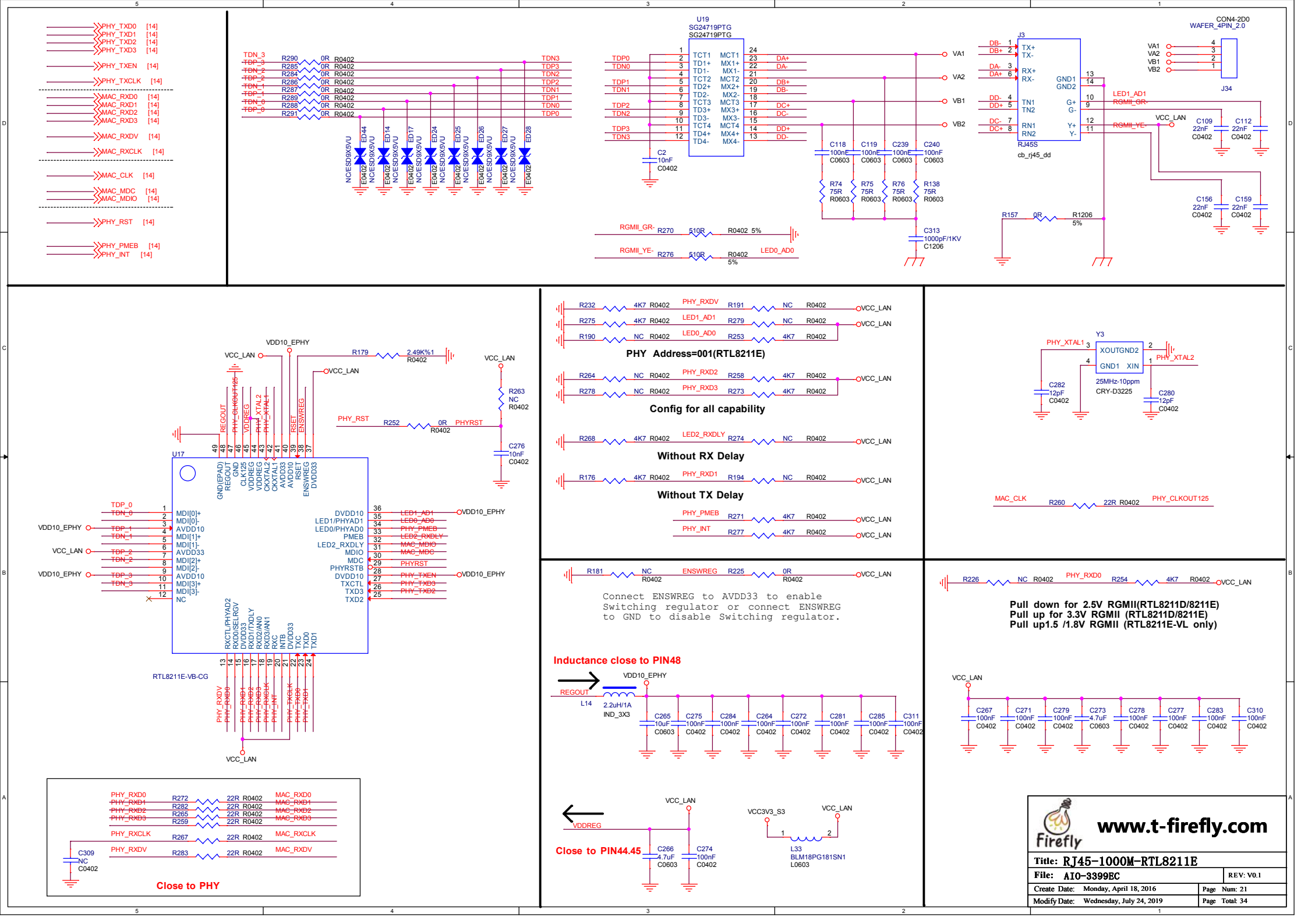
PHY_TXD0 [14]
PHY_TXD1 [14]
PHY_TXD2 [14]
PHY_TXD3 [14]
PHY_TXEN [14]
PHY_TXCLK [14]
MAC_RXD0 [14]
MAC_RXD1 [14]
MAC_RXD2 [14]
MAC_RXD3 [14]
MAC_RXDV [14]
MAC_RXCLK [14]
MAC_CLK [14]
MAC_MDC [14]
MAC_MDIO [14]
PHY_RST [14]
PHY_PMEB [14]
PHY_INT [14]
U19
SG24719PTG
SG24719PTG
CON4-2D0
WAFER_4PIN_2.0
J3
J34
RJ45S
cb_rj45_dd
U17
RTL8211E-VB-CG
VDD10_EPHY
VCC_LAN
PHY Address=001(RTL8211E)
Config for all capability
Without RX Delay
Without TX Delay
Y3
25MHz-10ppm
CRY-D3225
Connect ENSWREG to AVDD33 to enable
Switching regulator or connect ENSWREG
to GND to disable Switching regulator.
Inductance close to PIN48
Close to PIN44.45
Close to PHY
Pull down for 2.5V RGMII(RTL8211D/8211E)
Pull up for 3.3V RGMII (RTL8211D/8211E)
Pull up1.5 /1.8V RGMII (RTL8211E-VL only)
www.t-firefly.com
Title: RJ45-1000M-RTL8211E
File: AIO-3399EC
REV: V0.1
Create Date: Monday, April 18, 2016
Page Num: 21
Modify Date: Wednesday, July 24, 2019
Page Total: 34

HOST POWER

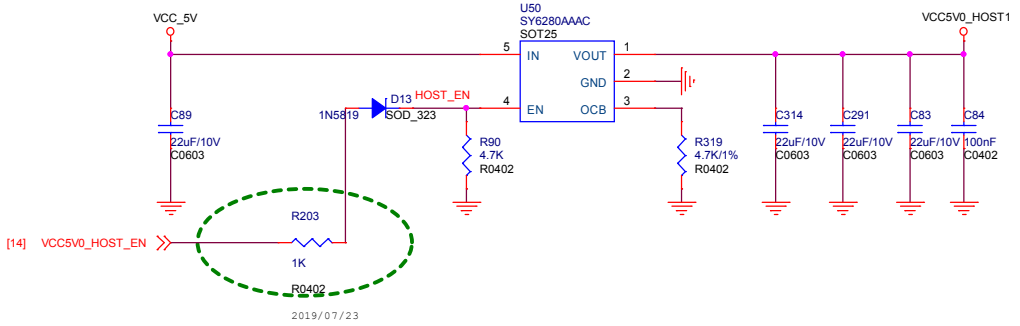

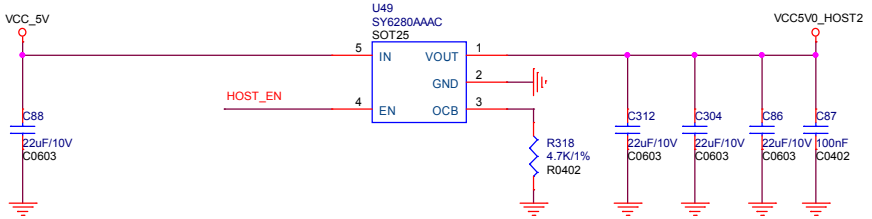

USB2.0

兼容不贴HUB的情况USB直接由主芯片输出

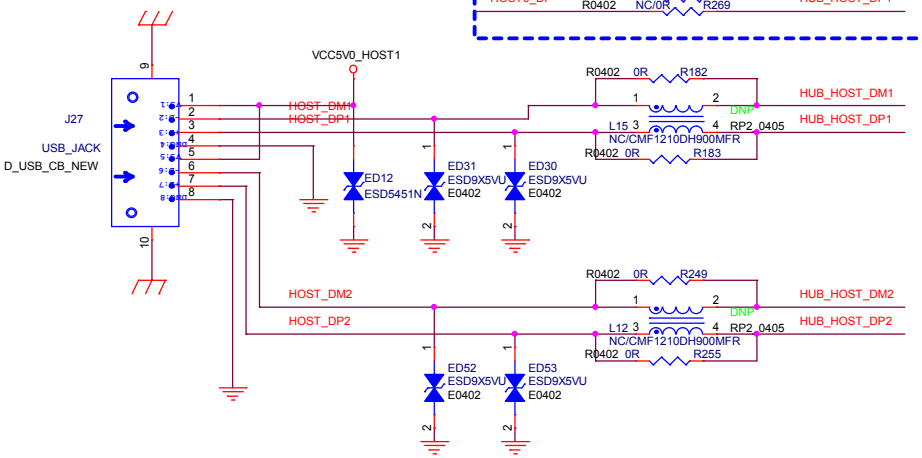

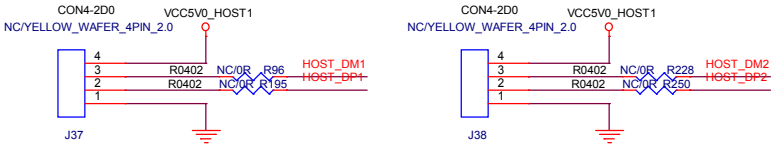

HUB

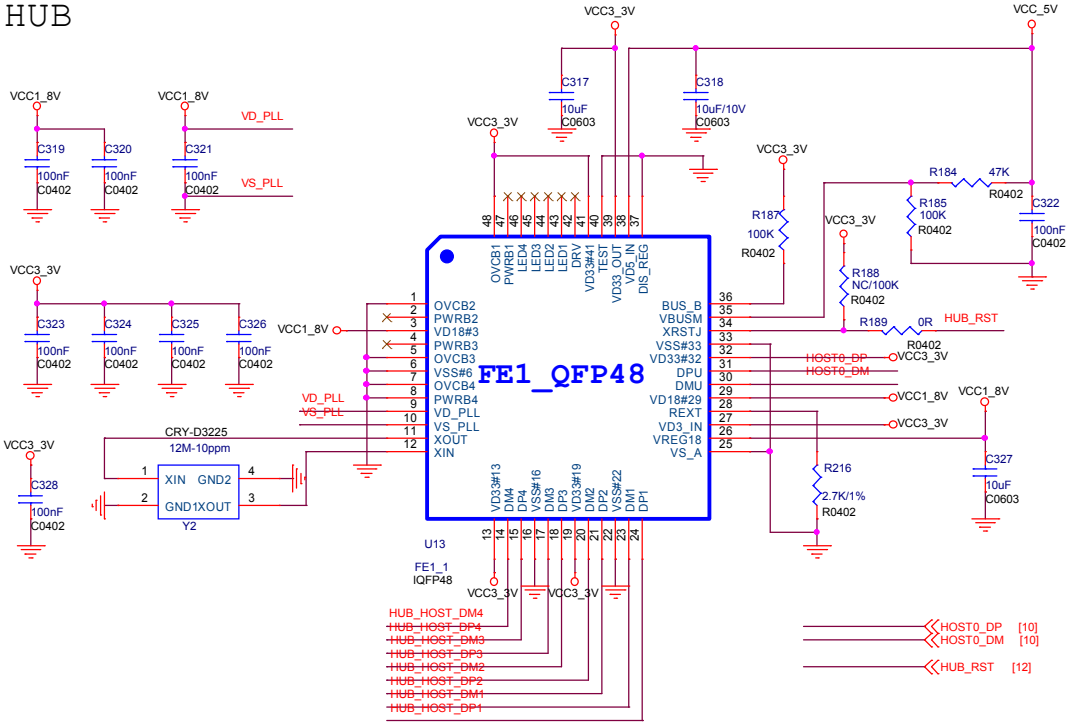

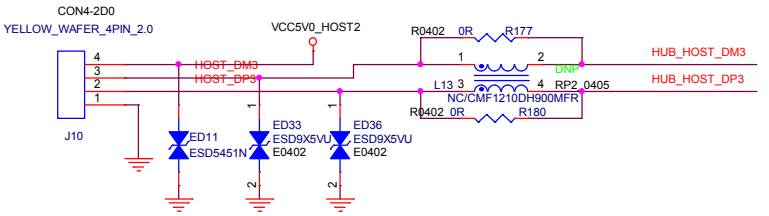

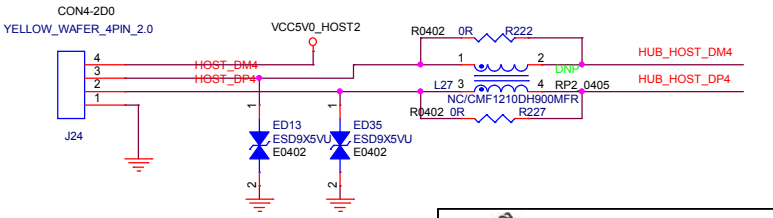

Firefly www.t-firefly.com

Title: HUB/USB2.0 Port		
File: AIO-3399EC		REV: V0.1
Create Date: Friday, April 29, 2016	Page	Num: 22
Modify Date: Wednesday, July 24, 2019	Page	Total: 34

HDMI Port

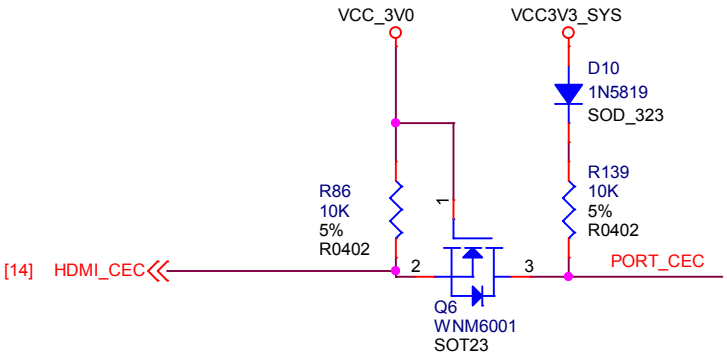

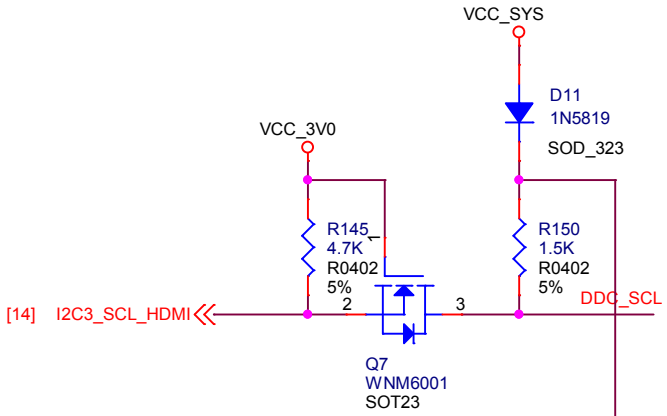

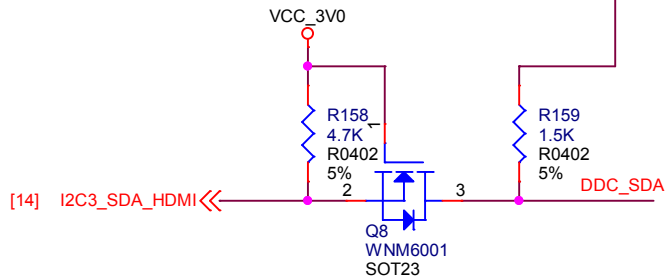

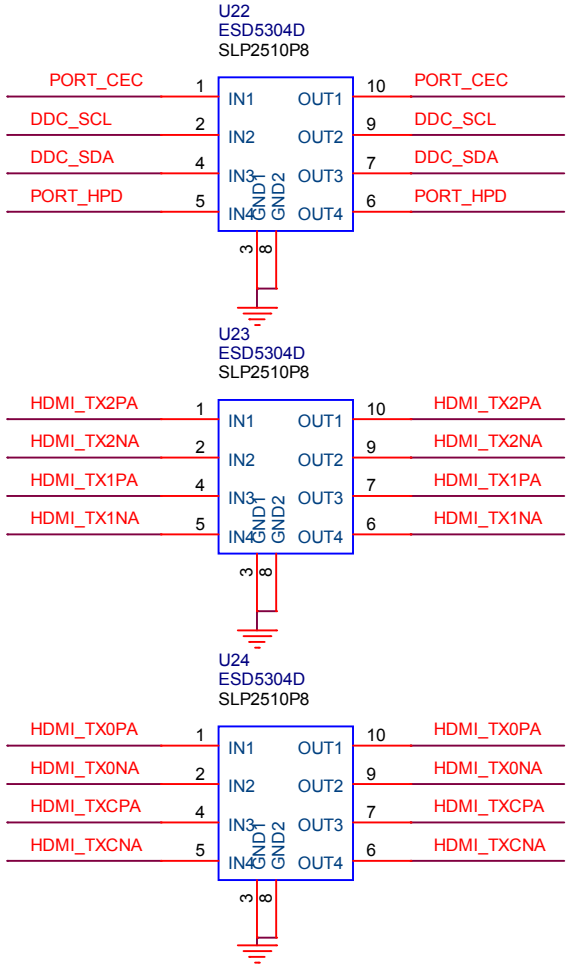

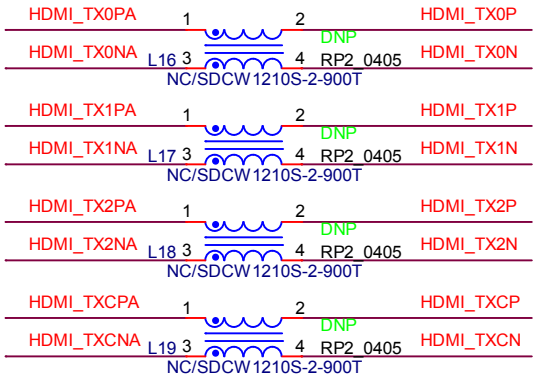

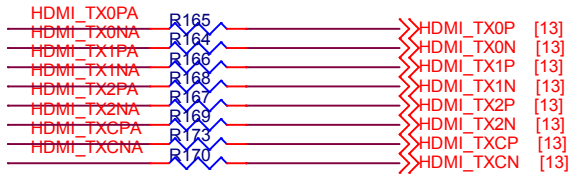

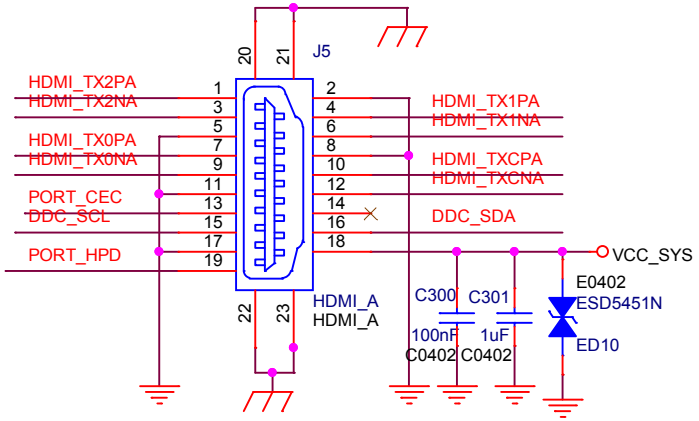

www.t-firefly.com

Title: HDMI Port		
File: AIO-3399EC		REV: V0.1
Create Date: Monday, March 28, 2016	Page Num: 23	
Modify Date: Wednesday, July 24, 2019	Page Total: 34	

TYPEC0_USB2.0

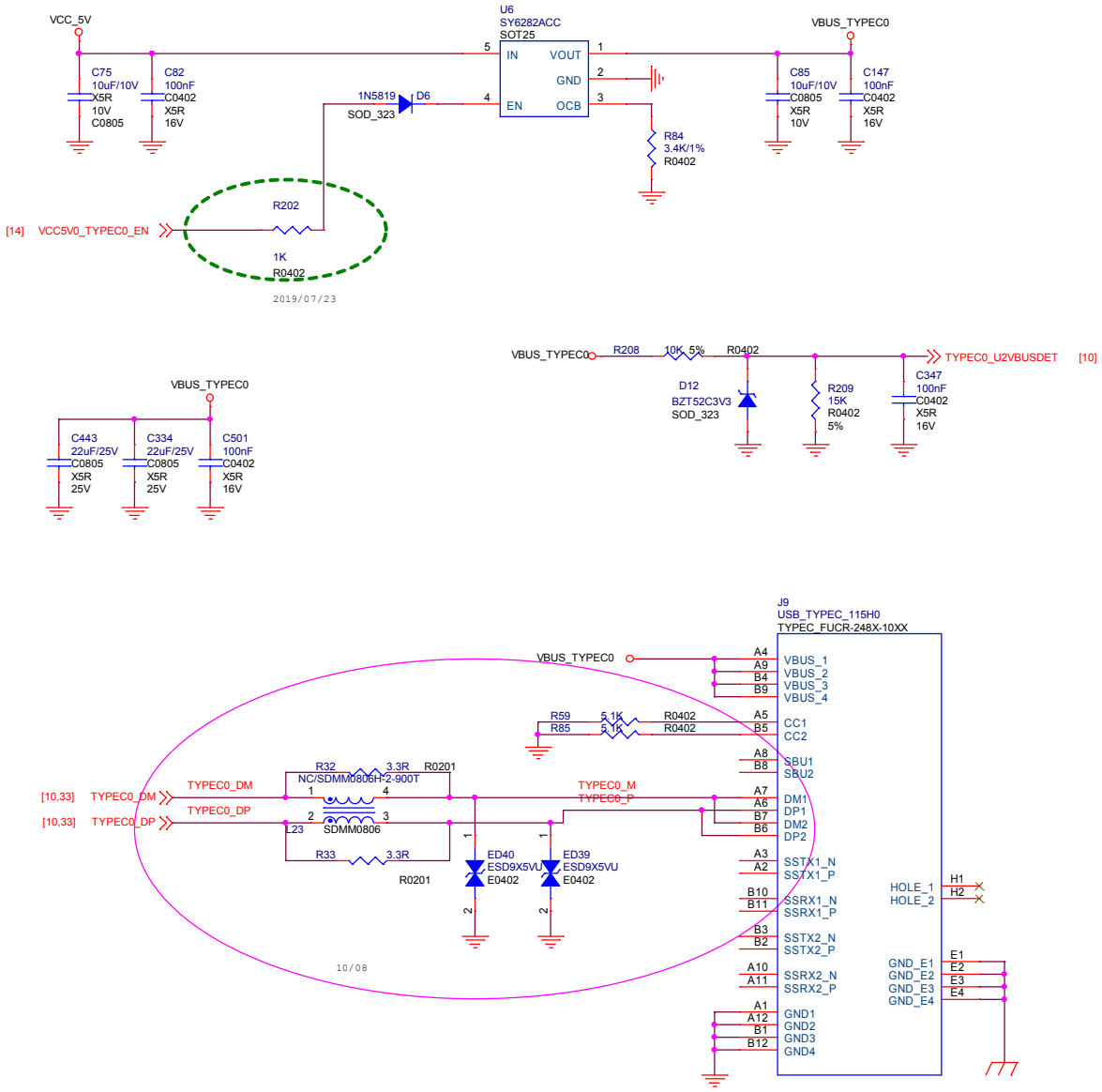

Firefly www.t-firefly.com

Title: TYPE-C0		
File: AIO-3399EC		REV: V0.1
Create Date: Monday, March 28, 2016	Page Num: 24	
Modify Date: Wednesday, July 24, 2019	Page Total: 34	

USB3.0 POWER

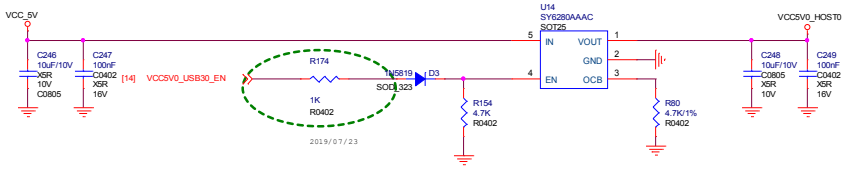

USB3.0

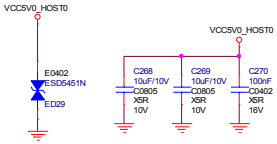

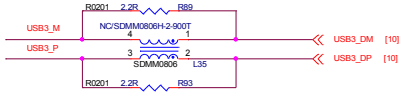

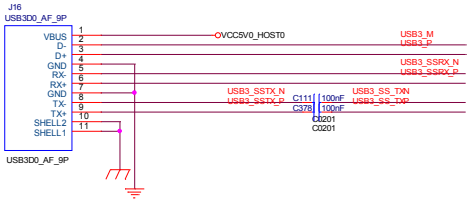

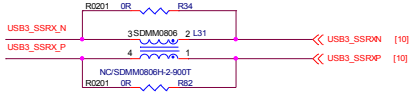

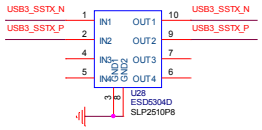

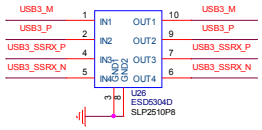

www.t-firefly.com

Title: USB3.0			
File: AIO-3399EC			REV: V0.1
Create Date:	Thursday, April 19, 2018	Page Num: 25	
Modify Date:	Wednesday, July 24, 2019	Page Total: 34	

EDP Display Interface

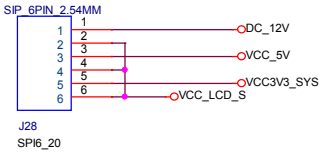

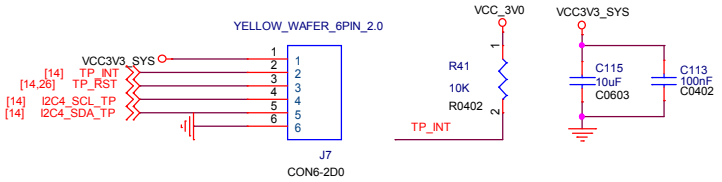

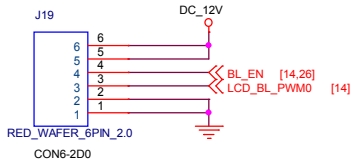

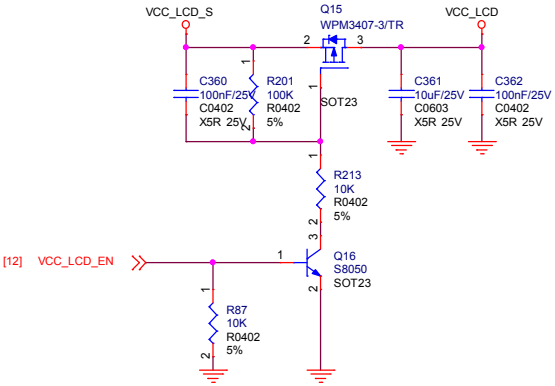

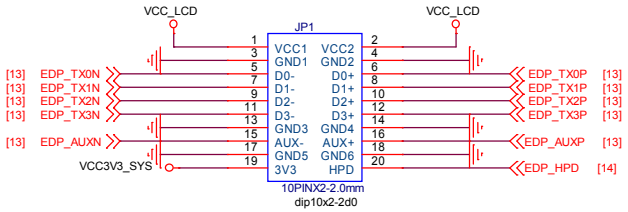

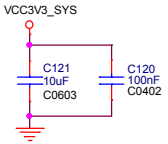

MIPI_PANEL

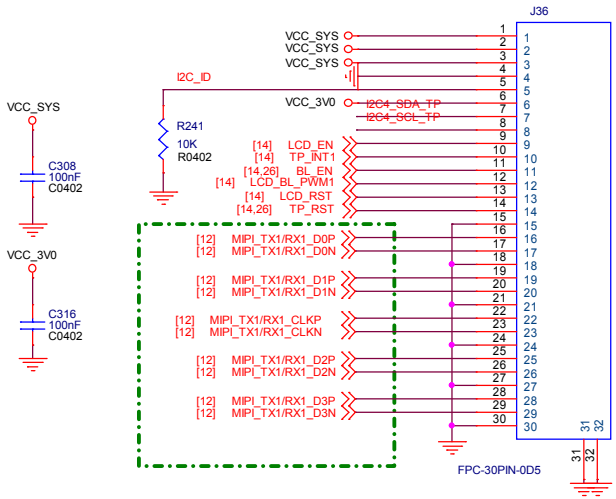

www.t-firefly.com

Title: MIPI/EDP Dsiplay Port		
File: AIO-3399EC		REV: V0.1
Create Date: Monday, June 20, 2016	Page	Num: 26
Modify Date: Wednesday, July 24, 2019	Page	Total: 34

MIPI Panel

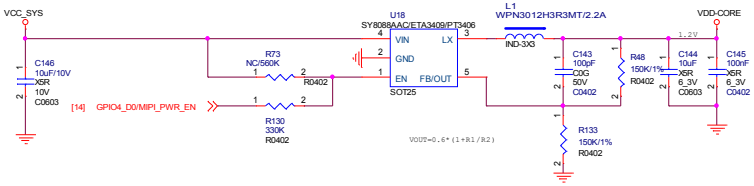

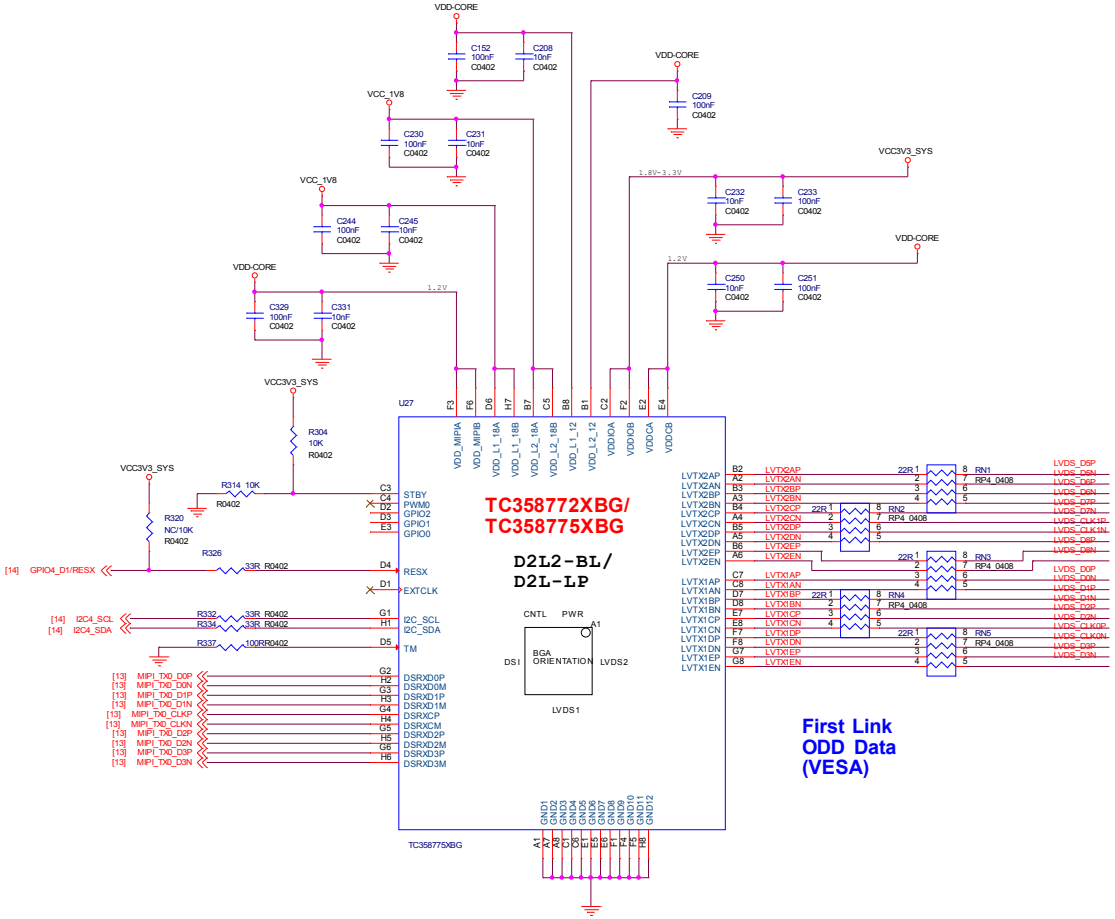

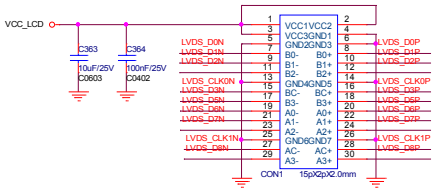

Title:	DOUBLE LVDS
File:	AIO-3399EC
REV:	V0.1
Create Date:	Monday, May 28, 2018
Page Num:	27
Modify Date:	Wednesday, July 24, 2019
Page Total:	34

www.t-firefly.com

WIFI/WIFI ac/BT MODULE

	Option2	Y6101	Default:AP6255 Note: YES：框要 贴 NO：框不 贴
AP6255	YES	37.4MHz	
AP6212A	NO	26MHz	

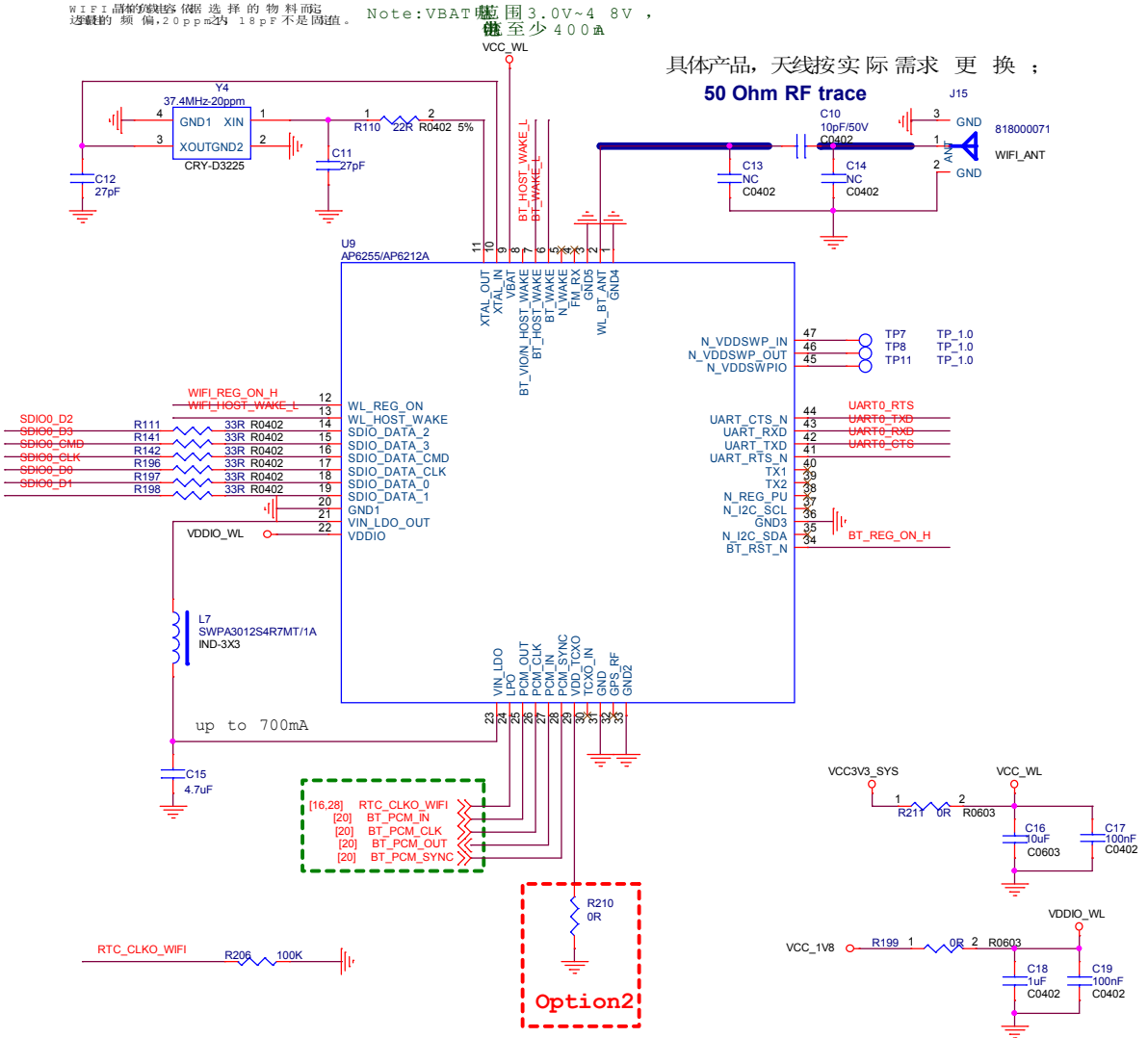

Firefly www.t-firefly.com

Title: WIFI-AP6212A/AP6255		
File: AIO-3399EC		REV: V0.1
Create Date: Monday, May 28, 2018	Page	Num: 28
Modify Date: Wednesday, July 24, 2019	Page	Total: 34

IR Receiver

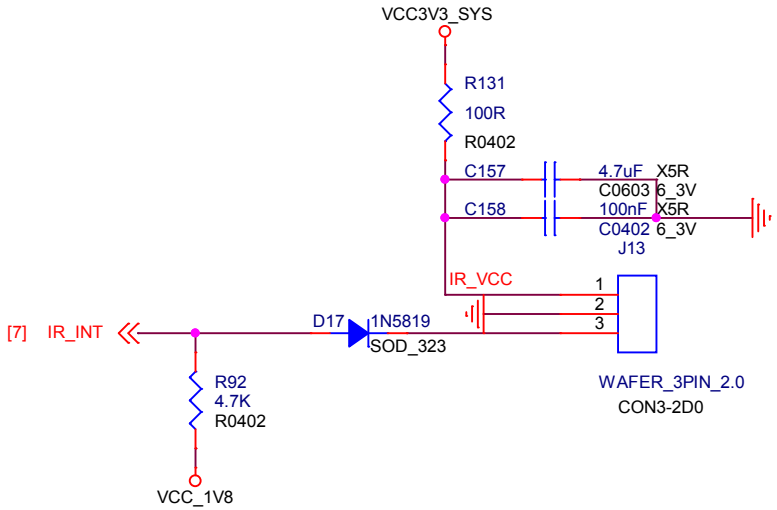

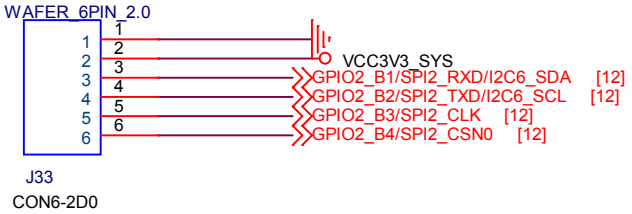

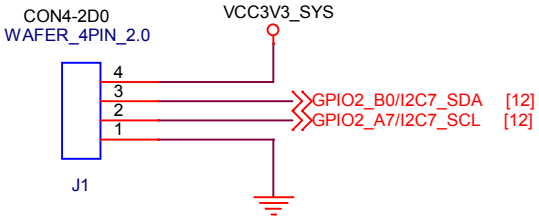

G-sensor

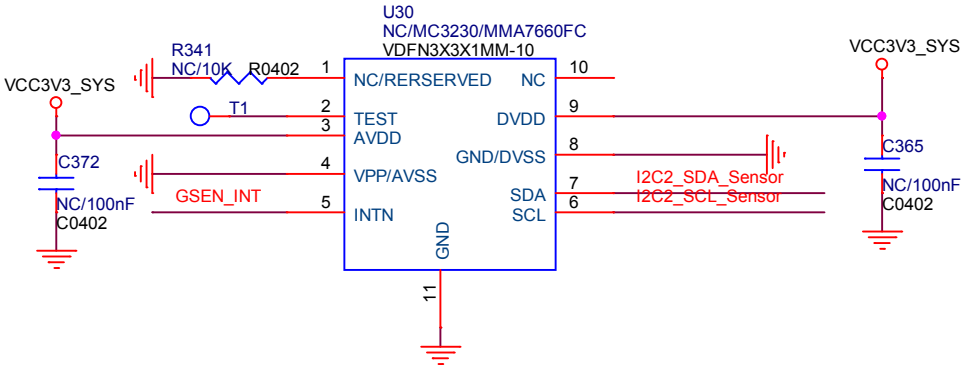

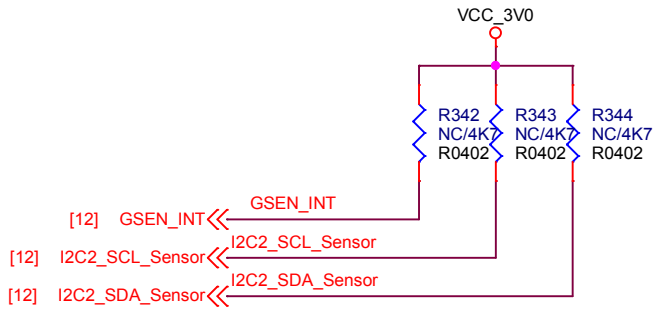

www.t-firefly.com

Title: IR/G-Sensor		
File: AIO-3399EC		REV: V0.1
Create Date: Tuesday, June 21, 2016	Page Num: 29	
Modify Date: Wednesday, July 24, 2019	Page Total: 34	

DEBUG

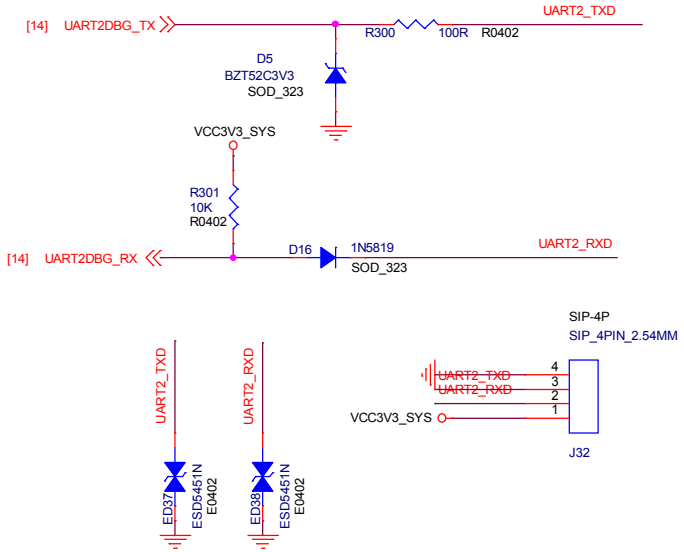

KEY

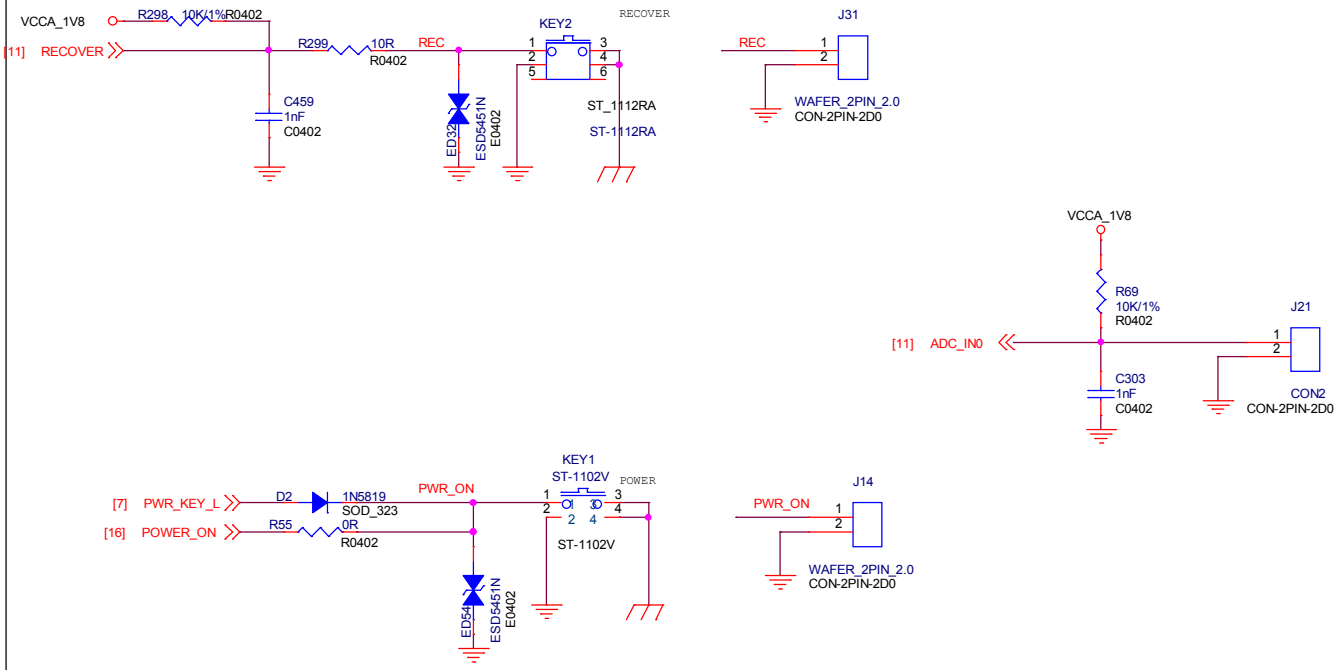

LED

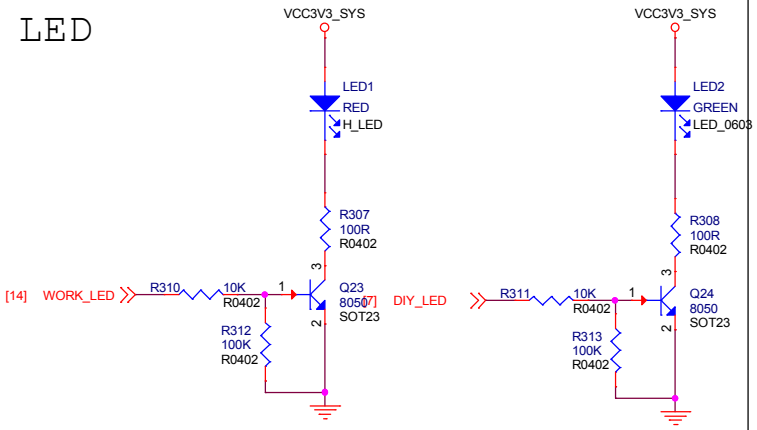

FAN

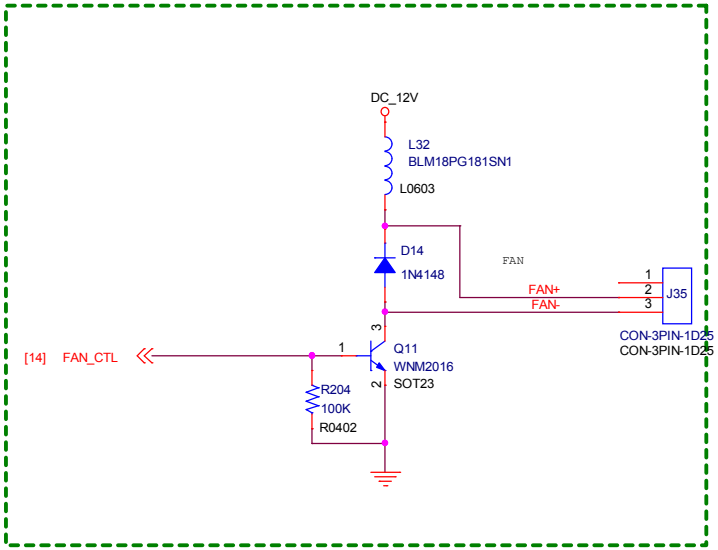

www.t-firefly.com

Title: KEY/LED/DEBUG		
File: AIO-3399EC		REV: V0.1
Create Date: Monday, July 18, 2016	Page Num: 30	
Modify Date: Wednesday, July 24, 2019	Page Total: 34	

MINI PCIE-3G/4G

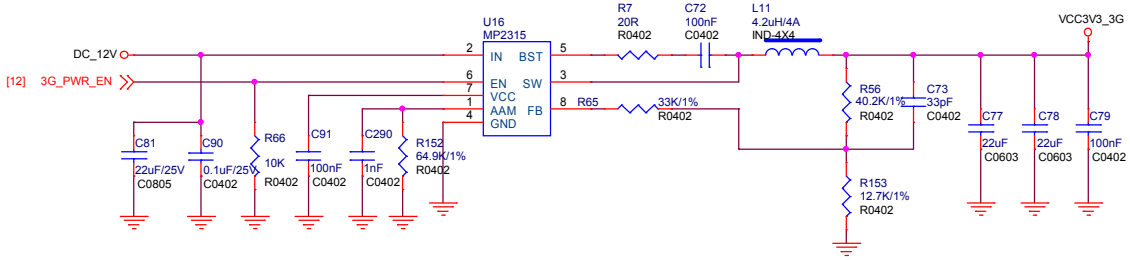

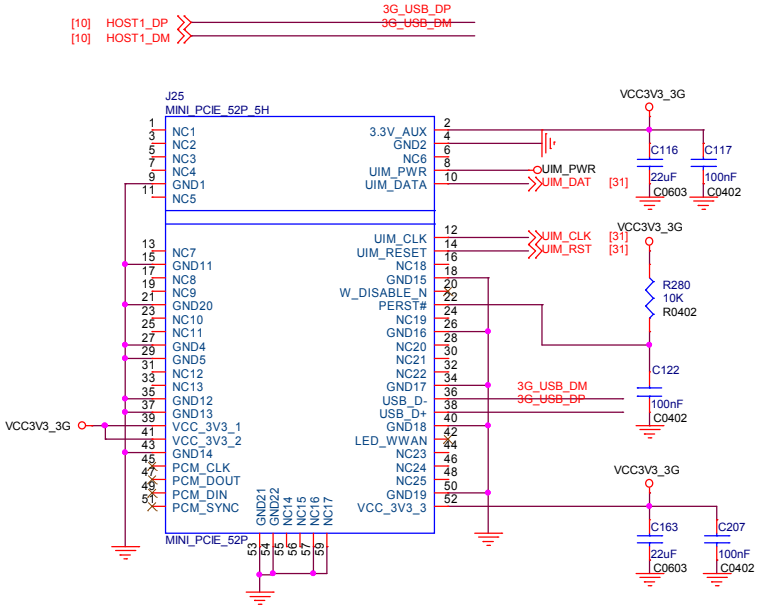

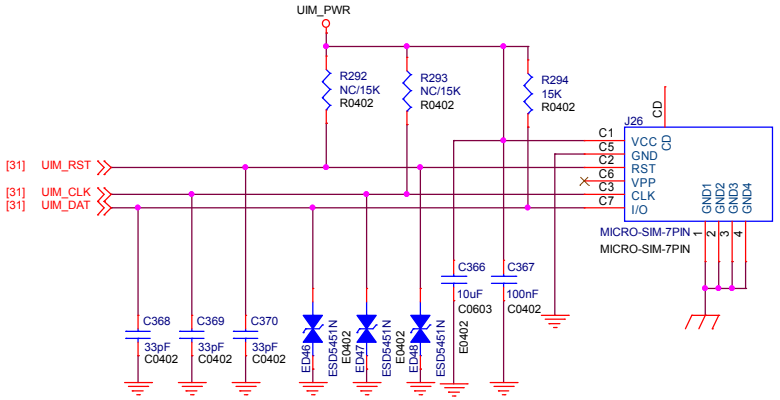

www.t-firefly.com

Title: 3G-4G-MODULE	
File: AIO-3399EC	REV: V0.1
Create Date: Monday, May 28, 2018	Page Num: 31
Modify Date: Wednesday, July 24, 2019	Page Total: 34

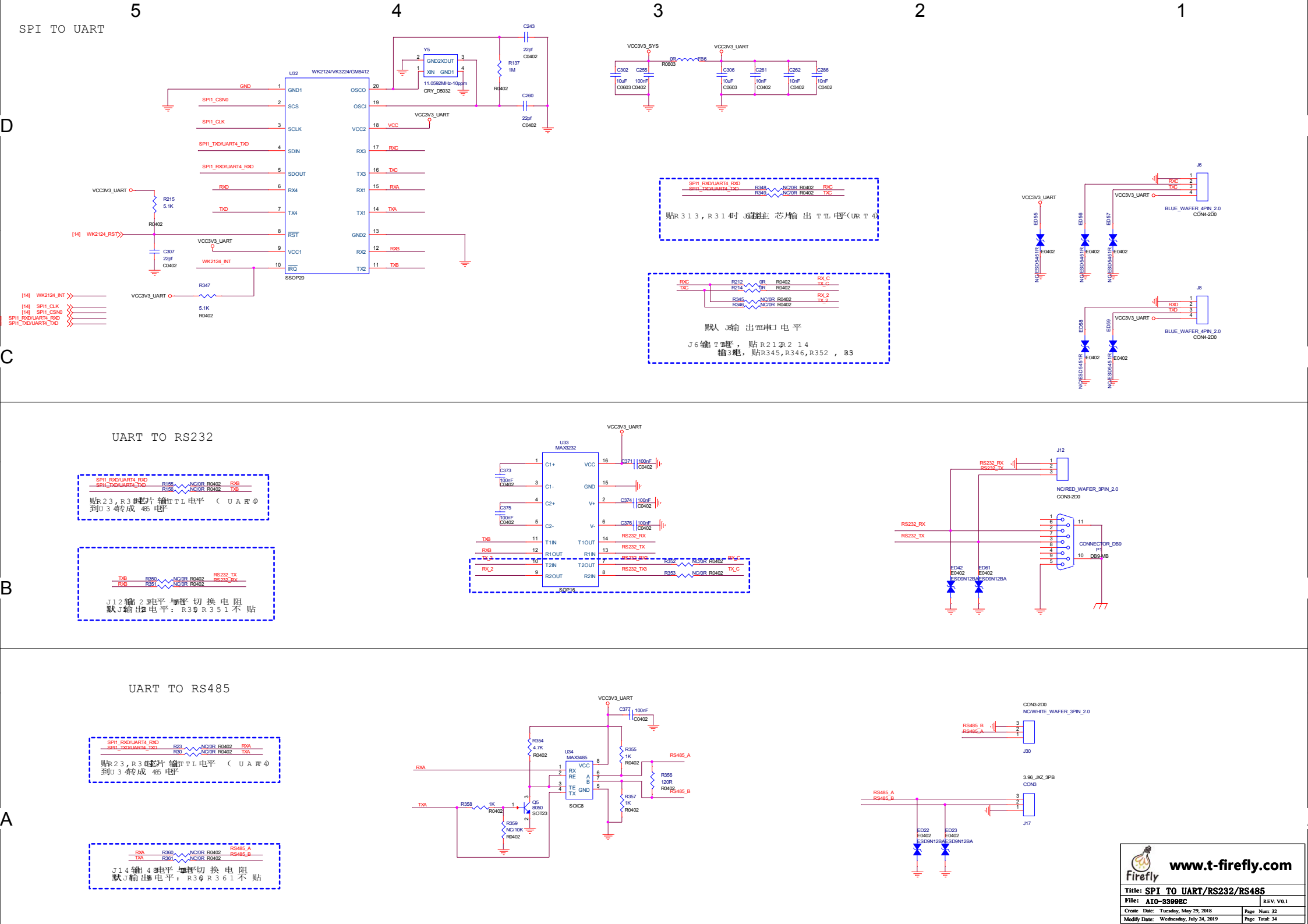

5
4
3
2
1
D
C
B
A
SPI TO UART
U32
WK2124/VK3224/GM8412
SSOP20
Y5
11.0592MHz-10ppm
CRY_D5032
VCC3V3_UART
VCC3V3_SYS
J6
J8
BLUE_WAFER_4PIN_2.0
CON4-2D0
UART TO RS232
U33
MAX3232
SOP16
J12
NC/RED_WAFER_3PIN_2.0
CON3-2D0
CONNECTOR_DB9
P1
DB9-MB
UART TO RS485
U34
MAX3485
SOIC8
Q5
8050
SOT23
CON3-2D0
NC/WHITE_WAFER_3PIN_2.0
J30
3.96_JXZ_3PB
CON3
J17
www.t-firefly.com
Title: SPI TO UART/RS232/RS485
File: AIO-3399EC
REV: V0.1
Create Date: Tuesday, May 29, 2018
Page Num: 32
Modify Date: Wednesday, July 24, 2019
Page Total: 34

USB 3.0-->EMMC

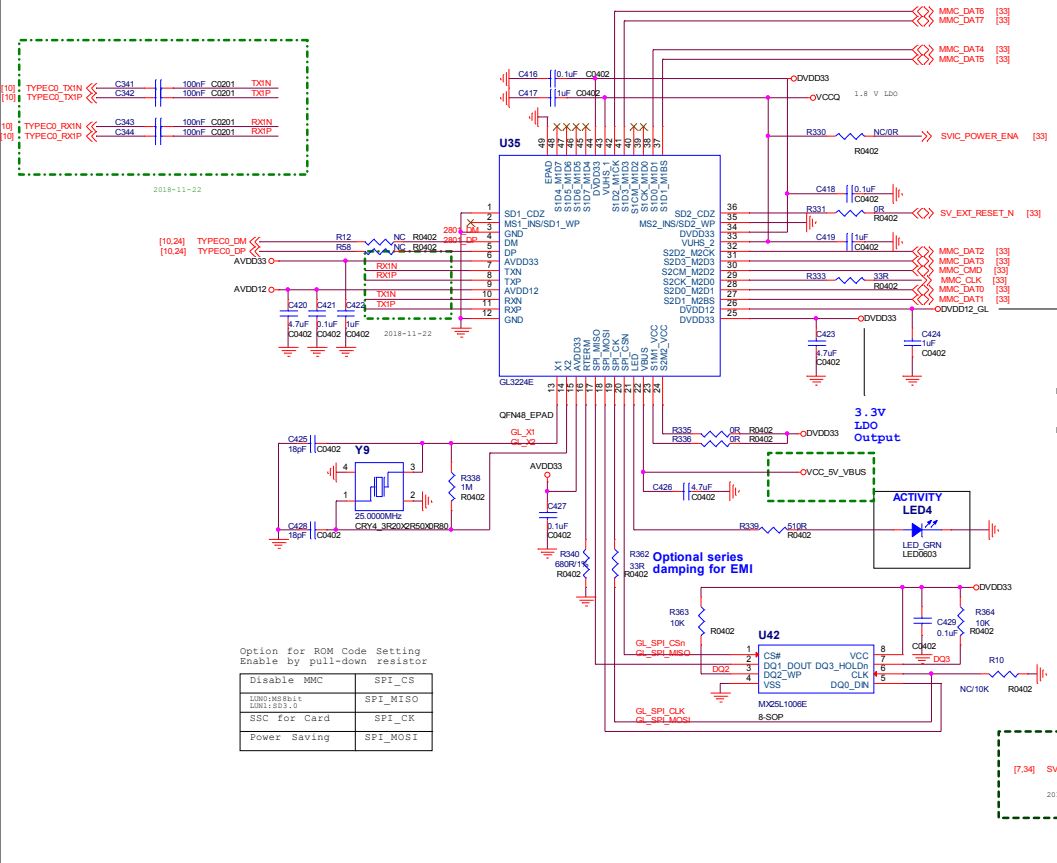

Level Shifter for MMC Compliance (MMC always starts up at 3.3V)

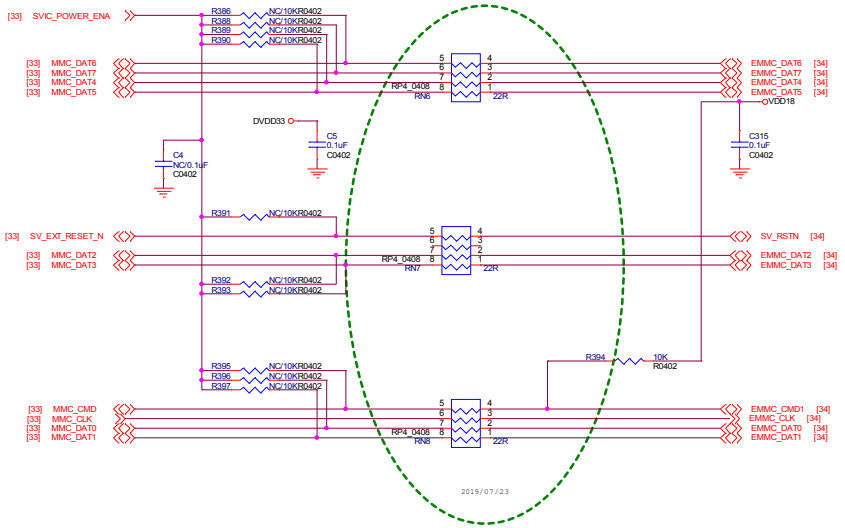

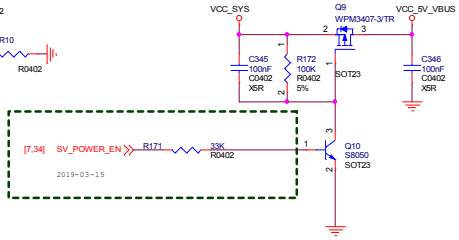

Title:	USB3.0 GL3224
File:	AIO-3399EC
REV:	0.1
Create Date:	Tuesday, October 09, 2018
Modify Date:	Wednesday, July 24, 2019
Page Num:	33
Page Total:	34

www.t-firefly.com

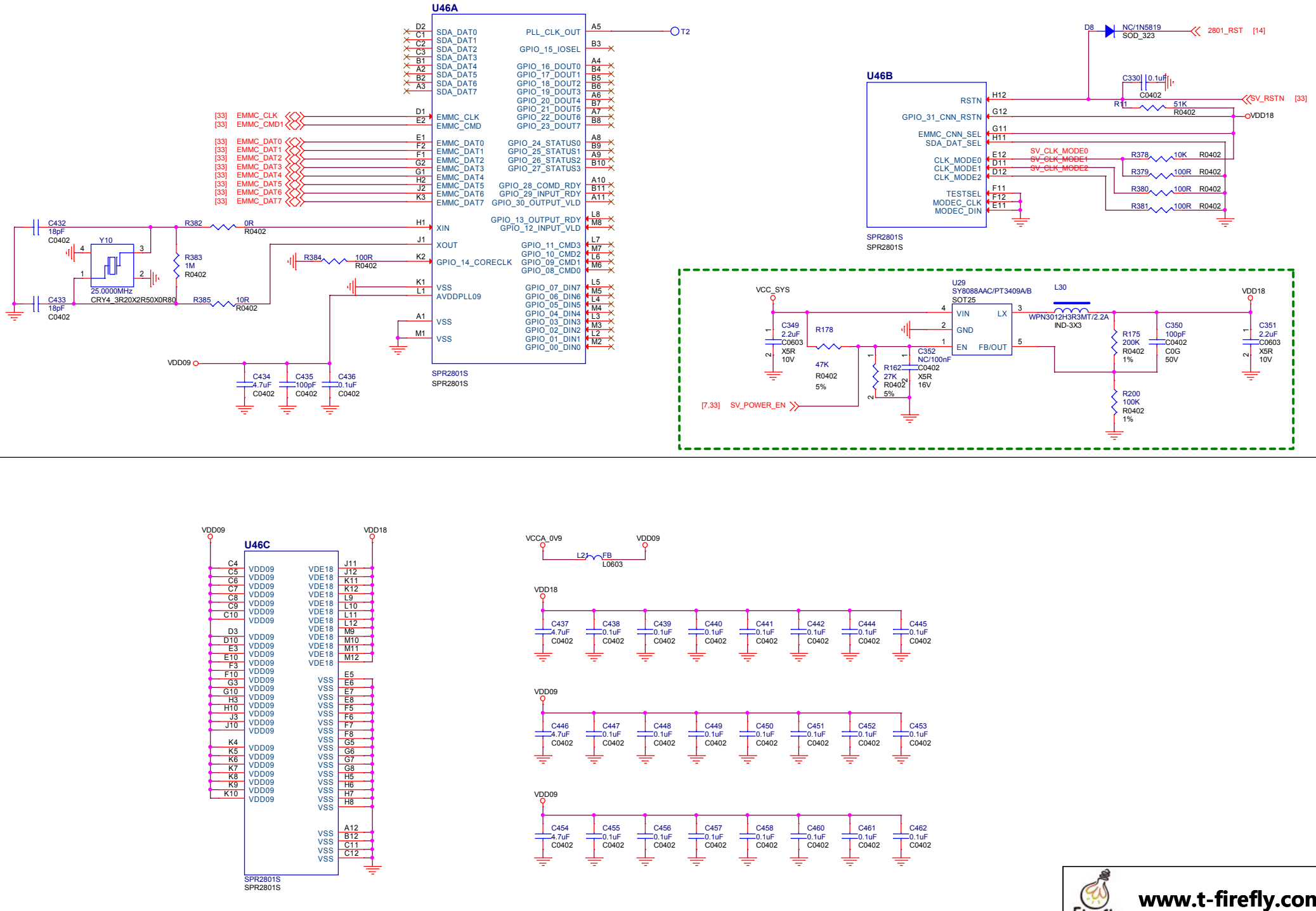

Firefly www.t-firefly.com

Title:	SPR2801
File:	AIO-3399EC
REV:	0.1
Create Date:	Tuesday, October 09, 2018
Modify Date:	Wednesday, July 24, 2019
Page Num:	34
Page Total:	34