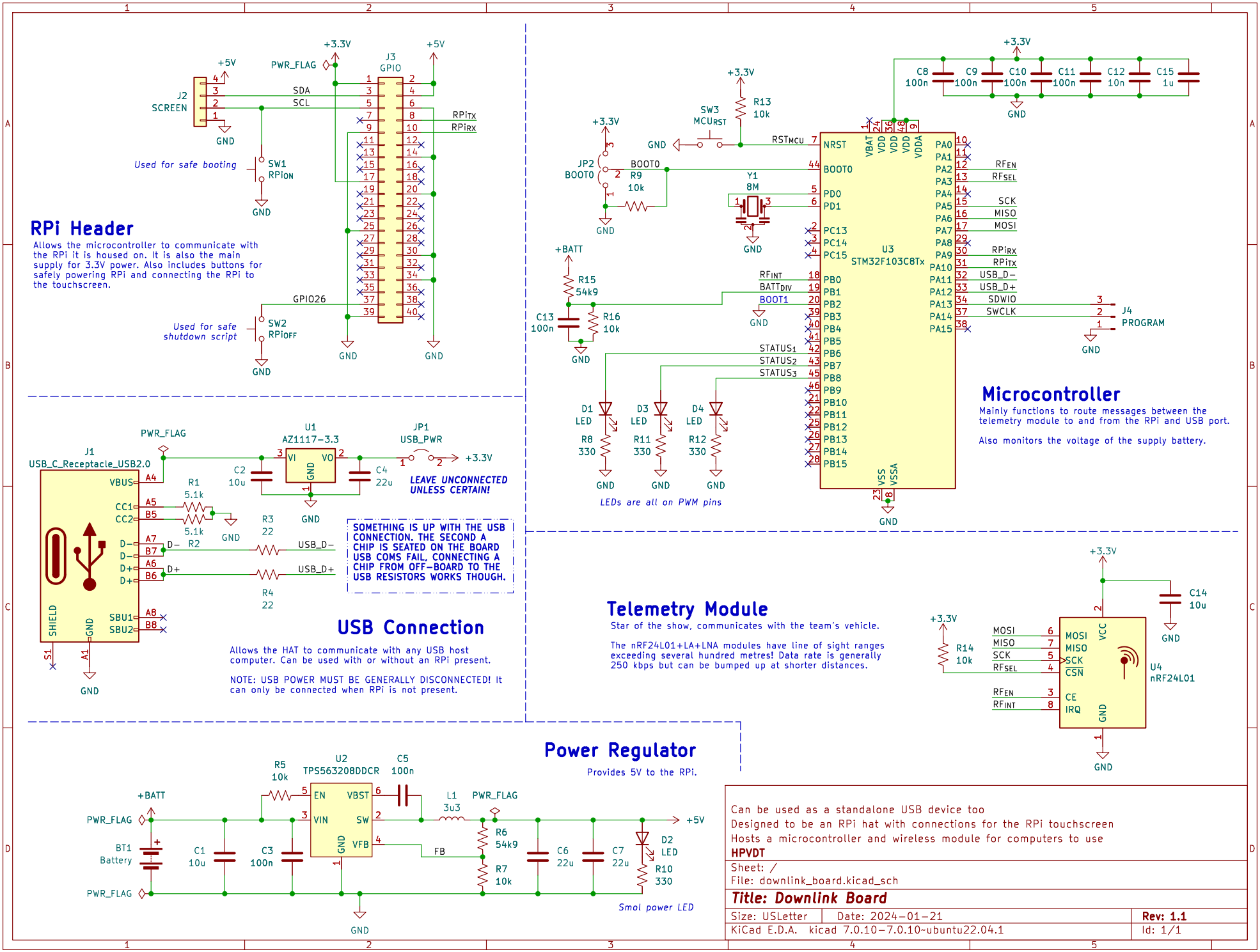
RPi Header
Allows the microcontroller to communicate with the RPi it is housed on. It is also the main supply for 3.3V power. Also includes buttons for safely powering RPi and connecting the RPi to the touchscreen.
J2 SCREEN
J3 GPIO
PWR_FLAG
+3.3V
+5V
SDA
SCL
RPiTX
RPiRX
GPIO26
Used for safe booting
SW1 RPiON
Used for safe shutdown script
SW2 RPiOFF
GND
Microcontroller
Mainly functions to route messages between the telemetry module to and from the RPi and USB port.
Also monitors the voltage of the supply battery.
U3 STM32F103C8Tx
NRST
BOOT0
PD0
PD1
PC13
PC14
PC15
PB0
PB1
PB2
PB3
PB4
PB5
PB6
PB7
PB8
PB9
PB10
PB11
PB12
PB13
PB14
PB15
PA0
PA1
PA2
PA3
PA4
PA5
PA6
PA7
PA8
PA9
PA10
PA11
PA12
PA13
PA14
PA15
VBAT
VDD
VDDA
VSS
VSSA
RSTMCU
SW3 MCURST
R13 10k
JP2 BOOT0
R9 10k
Y1 8M
C8 100n
C9 100n
C10 100n
C11 100n
C12 10n
C15 1u
RFEN
RFSEL
SCK
MISO
MOSI
SDWIO
SWCLK
J4 PROGRAM
+BATT
R15 54k9
R16 10k
C13 100n
RFINT
BATTDIV
BOOT1
STATUS1
STATUS2
STATUS3
D1 LED
D3 LED
D4 LED
R8 330
R11 330
R12 330
LEDs are all on PWM pins
USB Connection
Allows the HAT to communicate with any USB host computer. Can be used with or without an RPi present.
NOTE: USB POWER MUST BE GENERALLY DISCONNECTED! It can only be connected when RPi is not present.
J1 USB_C_Receptacle_USB2.0
VBUS
CC1
CC2
D−
D+
SHIELD
SBU1
SBU2
R1 5.1k
R2
R3 22
R4 22
U1 AZ1117-3.3
VI
VO
C2 10u
C4 22u
JP1 USB_PWR
LEAVE UNCONNECTED UNLESS CERTAIN!
SOMETHING IS UP WITH THE USB CONNECTION. THE SECOND A CHIP IS SEATED ON THE BOARD USB COMS FAIL, CONNECTING A CHIP FROM OFF-BOARD TO THE USB RESISTORS WORKS THOUGH.
Telemetry Module
Star of the show, communicates with the team's vehicle.
The nRF24L01+LA+LNA modules have line of sight ranges exceeding several hundred metres! Data rate is generally 250 kbps but can be bumped up at shorter distances.
R14 10k
C14 10u
U4 nRF24L01
MOSI
MISO
SCK
CSN
CE
IRQ
VCC
Power Regulator
Provides 5V to the RPi.
U2 TPS563208DDCR
EN
VIN
VBST
SW
VFB
R5 10k
C5 100n
L1 3u3
R6 54k9
R7 10k
FB
BT1 Battery
C1 10u
C3 100n
C6 22u
C7 22u
D2 LED
R10 330
Smol power LED
Can be used as a standalone USB device too
Designed to be an RPi hat with connections for the RPi touchscreen
Hosts a microcontroller and wireless module for computers to use
HPVDT
Sheet: /
File: downlink_board.kicad_sch
Title: Downlink Board
Size: USLetter
Date: 2024-01-21
Rev: 1.1
KiCad E.D.A. kicad 7.0.10-7.0.10~ubuntu22.04.1
Id: 1/1