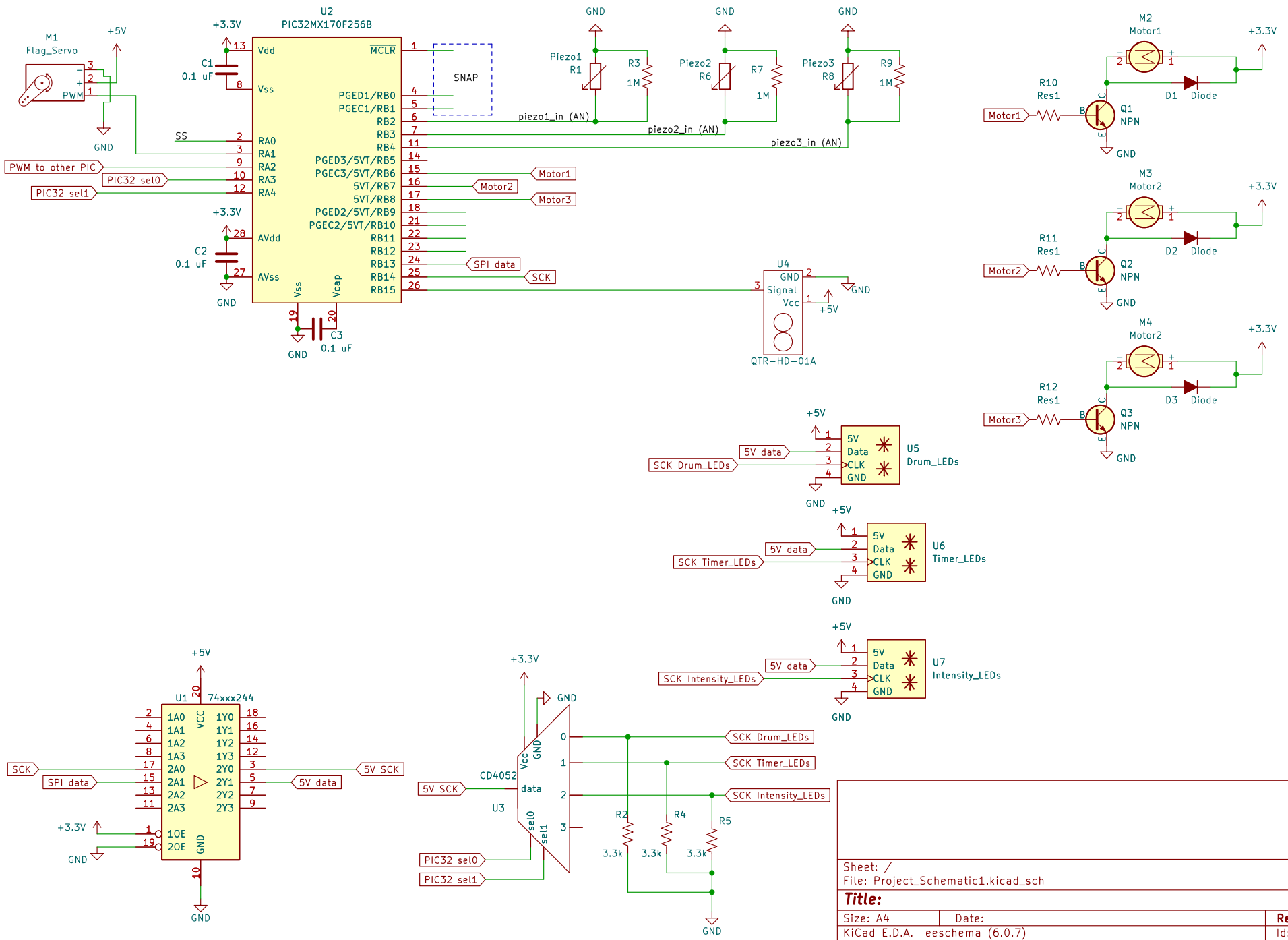

Sheet: /
File: Project_Schematic1.kicad_sch

Title:

Size: A4	Date:	Rev:
KiCad E.D.A. eeschema (6.0.7)		Id: 1/1