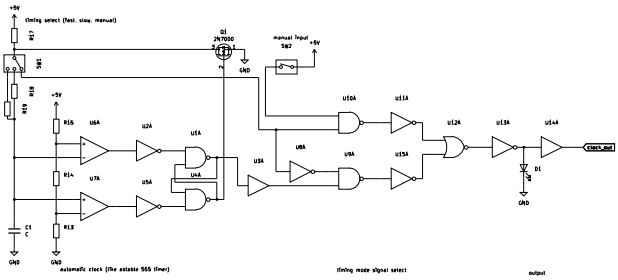
timing select (fast, slow, manual)
manual input
automatic clock (like astable 555 timer)
timing mode signal select
output
clock_out

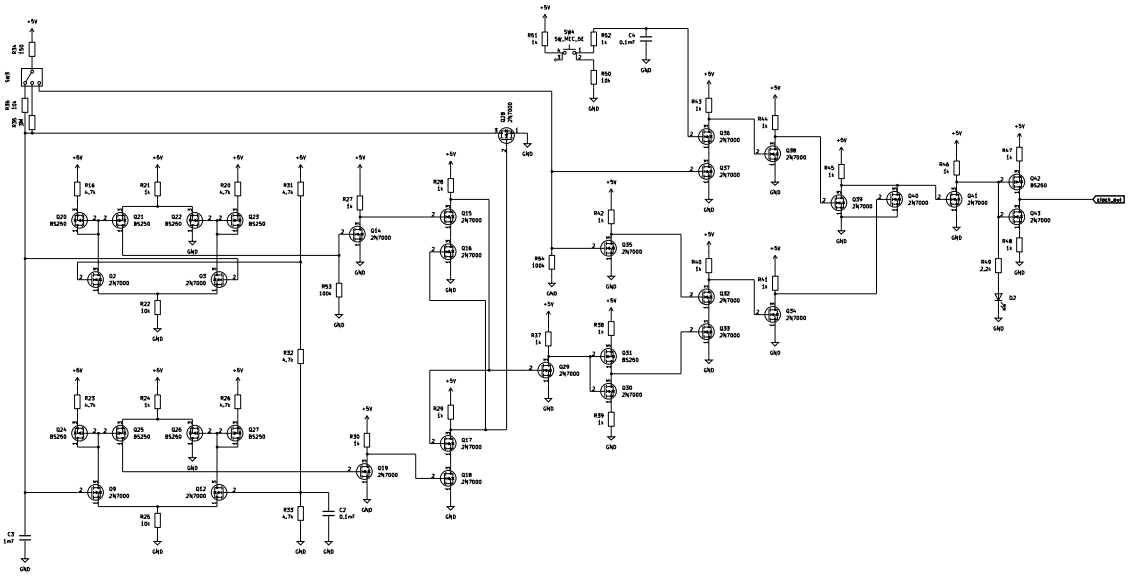
clock_out