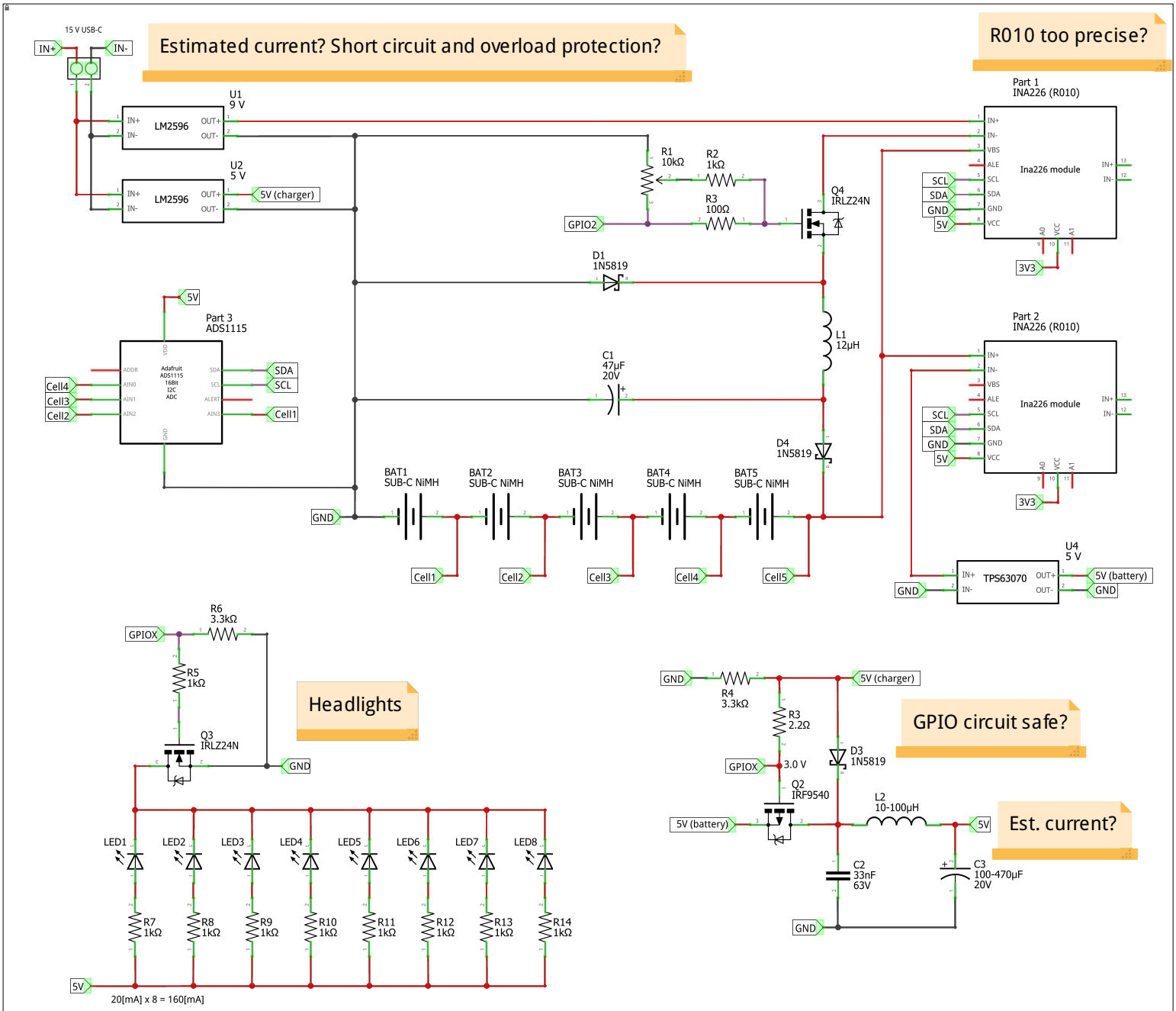

Author: Mikael Kofoed

Schematics over the controller unit in the bicycle.

Project	Bicycle controller device		
Filename	BicycleController.fzz	Rev	0
Date	07 mar 2025 22:20:18	Sheet	1/1

fritzing