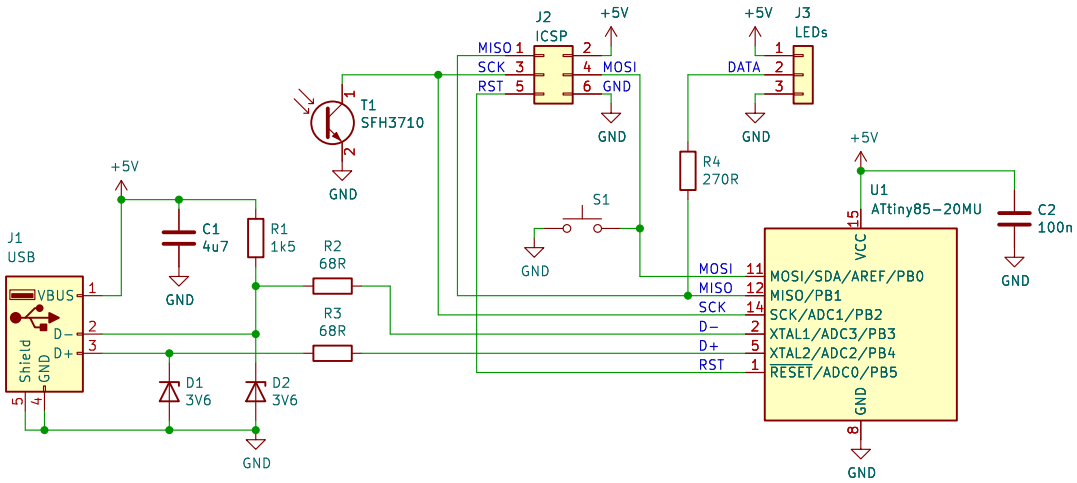

H1 MountingHole

H2 MountingHole

H3 MountingHole

H4 MountingHole

Tiny USB plug controller for WS2182 / SK6812
type LED strips in edge lit laser cut acrylic projects

Sheet: /
File: EdgeLED2.kicad_sch

Title: EdgeLED

Size: A4	Date: 29/12/2021	**Rev: 2.0**
KiCad E.D.A. kicad 7.0.9		Id: 1/1